Pioneer sound.vision.soul

Service Manual

DV-400V-S

ORDER NO.
RRV3578

DVD PLAYER

DV-400V-S
DV-400V-K

THIS MANUAL IS APPLICABLE TO THE FOLLOWING MODEL(S) AND TYPE(S).

Model	Type	Power Requirement	Region No.	Remarks
DV-400V-S	KUCXZT	AC 120 V	1	
DV-400V-K	KUCXZT	AC 120 V	1	

For details, refer to "Important Check Points for Good Servicing" .

PIONEER CORPORATION 4-1, Meguro 1-chome, Meguro-ku, Tokyo 153-8654, Japan
PIONEER ELECTRONICS (USA) INC. P.O. Box 1760, Long Beach, CA 90801-1760, U.S.A.
PIONEER EUROPE NV Haven 1087, Keetberglaan 1, 9120 Melsele, Belgium
PIONEER ELECTRONICS ASIACENTRE PTE. LTD. 253 Alexandra Road, #04-01, Singapore 159936
ⒸPIONEER CORPORATION 2007

T-ZZV APR. 2007 printed in Japan

SAFETY INFORMATION

This service manual is intended for qualified service technicians; it is not meant for the casual do-it-yourselfer. Qualified technicians have the necessary test equipment and tools, and have been trained to properly and safely repair complex products such as those covered by this manual.

Improperly performed repairs can adversely affect the safety and reliability of the product and may void the warranty. If you are not qualified to perform the repair of this product properly and safely, you should not risk trying to do so and refer the repair to a qualified service technician.

WARNING

This product contains lead in solder and certain electrical parts contain chemicals which are known to the state of California to cause cancer, birth defects or other reproductive harm.

Health & Safety Code Section 25249.6 – Proposition 65

NOTICE

(FOR CANADIAN MODEL ONLY)

Fuse symbols (fast operating fuse) and/or (slow operating fuse) on PCB indicate that replacement parts must be of identical designation.

REMARQUE

(POUR MODÈLE CANADIEN SEULEMENT)

Les symboles de fusible (fusible de type rapide) et/ou (fusible de type lent) sur CCI indiquent que les pièces de remplacement doivent avoir la même désignation.

(FOR USA MODEL ONLY)

1. SAFETY PRECAUTIONS

The following check should be performed for the continued protection of the customer and service technician.

LEAKAGE CURRENT CHECK

Measure leakage current to a known earth ground (water pipe, conduit, etc.) by connecting a leakage current tester such as Simpson Model 229-2 or equivalent between the earth ground and all exposed metal parts of the appliance (input/output terminals, screwheads, metal overlays, control shaft, etc.). Plug the AC line cord of the appliance directly into a 120V AC 60 Hz outlet and turn the AC power switch on. Any current measured must not exceed 0.5 mA.

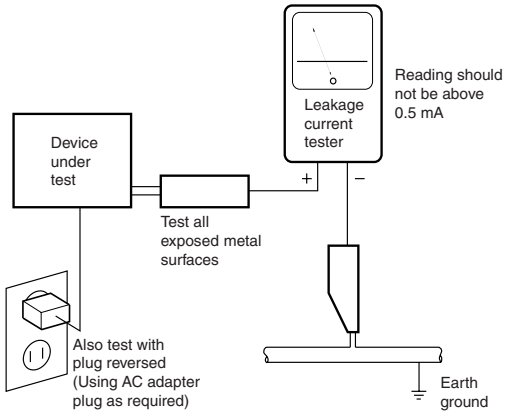

AC Leakage Test

ANY MEASUREMENTS NOT WITHIN THE LIMITS OUTLINED ABOVE ARE INDICATIVE OF A POTENTIAL SHOCK HAZARD AND MUST BE CORRECTED BEFORE RETURNING THE APPLIANCE TO THE CUSTOMER.

2. PRODUCT SAFETY NOTICE

Many electrical and mechanical parts in the appliance have special safety related characteristics. These are often not evident from visual inspection nor the protection afforded by them necessarily can be obtained by using replacement components rated for voltage, wattage, etc. Replacement parts which have these special safety characteristics are identified in this Service Manual.

Electrical components having such features are identified by marking with a ⚠ on the schematics and on the parts list in this Service Manual.

The use of a substitute replacement component which does not have the same safety characteristics as the PIONEER recommended replacement one, shown in the parts list in this Service Manual, may create shock, fire, or other hazards.

Product Safety is continuously under review and new instructions are issued from time to time. For the latest information, always consult the current PIONEER Service Manual. A subscription to, or additional copies of, PIONEER Service Manual may be obtained at a nominal charge from PIONEER.

WARNING !

THE AEL (ACCESSIBLE EMISSION LEVEL) OF THE LASER POWER OUTPUT IS LESS THAN CLASS 1 BUT THE LASER COMPONENT IS CAPABLE OF EMITTING RADIATION EXCEEDING THE LIMIT FOR CLASS 1.
A SPECIALLY INSTRUCTED PERSON SHOULD DO SERVICING OPERATION OF THE APPARATUS.

LASER DIODE CHARACTERISTICS

FOR DVD : MAXIMUM OUTPUT POWER : 5 mW
WAVELENGTH : 650 nm
FOR CD : MAXIMUM OUTPUT POWER : 5 mW
WAVELENGTH : 780 nm

LABEL CHECK

Location: inside of the unit

CAUTION : CLASS 1M LASER RADIATION WHEN OPEN. DO NOT VIEW DIRECTLY WITH OPTICAL INSTRUMENTS. 726000A140 SH
Vorsicht : KLASSE 1M LASER Strahlung: Bei geöffnetem Gerät nicht mit optischen Geräten in den Laserstrahl blicken.
PRECAUCIÓN : RADIACIÓN LASER CLASE 1M, AL ABRIR NO MIRAR DIRECTAMENTE CON INSTRUMENTOIS ÓPTICOS.
VIKTIGT : KLASS 1M LASER STRÅLNING: NÄR APPARATEN ÄR ÖPPEN, TITTA INTE RAKT IN I DEN, SPECIELLT INTE OM DU HAR GLASÖGON PÅ DIG.
Varoitus! : Luokka 1M:n lasersäteily: Älä koskaan katso laitteen sisään sen ollessa auki-ei myöskään silmälaseilla tai muilla optisilla laitteilla!
ADVARSEL : LASERSTRÅLER KLASSE 1M KIG IKKE DIREKTE IND I APPARATET, NÅR DETTE ER ÅBENT. IS/ER IKKE MED BRILLER ELLER ANDRE OPTISKE OBJEKTER.

CLASS 1
LASER PRODUCT

(Printed on the Rear Panel)

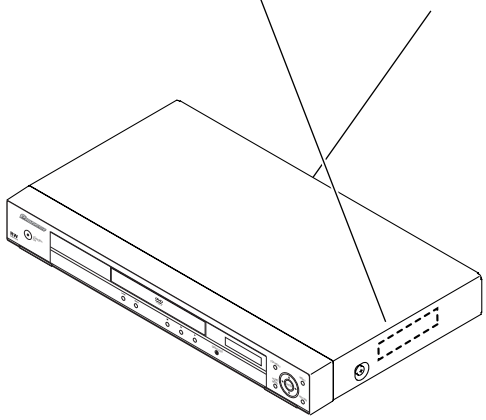

Additional Laser Caution

1.
- Laser diode is driving with Q2303,Q2305(650nm LD) and Q2302, Q2304(780nm LD)on the DVD MT PCB Assy.
  Therefore, when short-circuit between the emitter and collector of these transistors or the base voltage is supplied for transistors turn on, the laser oscillates. (failure mode)
- In the test mode ∗ , there is the mode that the laser oscillates except for the disc judgment and playback. LD ON mode in the test mode oscillates with the laser forcibly.

2. When the cover is open, close viewing through the objective lens with the naked eye will cause exposure to the laser beam.

∗ : See page 28.

[Important Check Points for Good Servicing]

In this manual, procedures that must be performed during repairs are marked with the below symbol.
Please be sure to confirm and follow these procedures.

1. Product safety

Please conform to product regulations (such as safety and radiation regulations), and maintain a safe servicing environment by following the safety instructions described in this manual.

① Use specified parts for repair.

Use genuine parts. Be sure to use important parts for safety.

② Do not perform modifications without proper instructions.

Please follow the specified safety methods when modification(addition/change of parts) is required due to interferences such as radio/TV interference and foreign noise.

③ Make sure the soldering of repaired locations is properly performed.

When you solder while repairing, please be sure that there are no cold solder and other debris.
Soldering should be finished with the proper quantity. (Refer to the example)

④ Make sure the screws are tightly fastened.

Please be sure that all screws are fastened, and that there are no loose screws.

⑤ Make sure each connectors are correctly inserted.

Please be sure that all connectors are inserted, and that there are no imperfect insertion.

⑥ Make sure the wiring cables are set to their original state.

Please replace the wiring and cables to the original state after repairs.
In addition, be sure that there are no pinched wires, etc.

⑦ Make sure screws and soldering scraps do not remain inside the product.

Please check that neither solder debris nor screws remain inside the product.

⑧ There should be no semi-broken wires, scratches, melting, etc. on the coating of the power cord.

Damaged power cords may lead to fire accidents, so please be sure that there are no damages.
If you find a damaged power cord, please exchange it with a suitable one.

⑨ There should be no spark traces or similar marks on the power plug.

When spark traces or similar marks are found on the power supply plug, please check the connection and advise on secure connections and suitable usage. Please exchange the power cord if necessary.

⑩ Safe environment should be secured during servicing.

When you perform repairs, please pay attention to static electricity, furniture, household articles, etc. in order to prevent injuries.
Please pay attention to your surroundings and repair safely.

2. Adjustments

To keep the original performance of the products, optimum adjustments and confirmation of characteristics within specification.
Adjustments should be performed in accordance with the procedures/instructions described in this manual.

3. Lubricants, Glues, and Replacement parts

Use grease and adhesives that are equal to the specified substance.
Make sure the proper amount is applied.

4. Cleaning

For parts that require cleaning, such as optical pickups, tape deck heads, lenses and mirrors used in projection monitors, proper cleaning should be performed to restore their performances.

5. Shipping mode and Shipping screws

To protect products from damages or failures during transit, the shipping mode should be set or the shipping screws should be installed before shipment. Please be sure to follow this method especially if it is specified in this manual.

CONTENTS

SAFETY INFORMATION....2
1. SERVICE PRECAUTIONS....6
1.1 NOTES ON SOLDERING....6
1.2 WHEN REPLACING DVD DECK....6
1.3 DISC REMOVAL METHOD....7
2. SPECIFICATIONS....8
2.1 ACCESSORIES....8
2.2 SPECIFICATIONS....9
2.3 DISC/CONTENT FORMAT....10
2.4 PANEL FACILITIES....12
3. BASIC ITEMS FOR SERVICE....15
3.1 CHECK POINTS AFTER SERVICING....15
3.2 PCB LOCATIONS....16
3.3 JIGS LIST....17
4. BLOCK DIAGRAM....18
4.1 OVERALL WIRING CONNECTION DIAGRAM....18
4.2 OVERALL BLOCK DIAGRAM....20
4.3 DVD LOADER BLOCK DIAGRAM....21
4.4 POWER BLOCK DIAGRAM....22
5. DIAGNOSIS....23
5.1 TROUBLE SHOOTING....23
5.2 METHOD FOR DIAGNOSING DEGRADATION OF THE LDS ON THE PICKUP ASSY....27
6. SERVICE MODE....28
6.1 SERVICE MODE PROCEDURE....28
6.2 SERVICE MODE IN....29
6.3 DISPLAY SPECIFICATION OF THE SERVICE MODE....30
6.4 FUNCTIONAL SPECIFICATION OF THE SHORTCUT KEY....31
6.5 FUNCTIONAL SPECIFICATION OF THE SERVICE MODE....32
7. DISASSEMBLY....33
7.1 EXTERIOR SECTION....33
7.2 DVD DECK SECTION....35
8. EACH SETTING AND ADJUSTMENT....39
8.1 ADJUSTMENT....39
8.2 RE-WRITE FOR DVD FIRMWARE....39
9. EXPLODED VIEWS AND PARTS LIST....42
9.1 PACKING SECTION....42
9.2 EXTERIOR SECTION....44
9.3 06 DVD MECHA SECTION....46
10. SCHEMATIC DIAGRAM....48
10.1 DVD MT PCB ASSY (1/7)....48
10.2 DVD MT PCB ASSY(2/7)....50
10.3 DVD MT PCB ASSY(3/7)....52
10.4 DVD MT PCB ASSY(4/7)....54
10.5 DVD MT PCB ASSY(5/7)....56
10.6 DVD MT PCB ASSY(6/7)....58
10.7 DVD MT PCB ASSY(7/7)....60
10.8 OPERATION 1 and OPERATION 2 and OPERATION 3 PCB ASSYS....62
10.9 POWER PCB ASSY....64
10.10 USB PCB ASSY....66
10.11 WAVE FORMS....68
11. PCB CONNECTION DIAGRAM....70
11.1 DVD MT PCB ASSY....71
11.2 OPERATION 1 PCB and OPERATION 2 PCB ASSYS (WYXZT5 types)....73
11.3 POWER PCB ASSY....74
11.4 USB PCB ASSY and LOADING MOTER and SW....76
12. PCB PARTS LIST....77

1. SERVICE PRECAUTIONS

1.1 NOTES ON SOLDERING

NOTES ON SOLDERING

- For environmental protection, lead-free solder is used on the printed circuit boards mounted in this unit.
  Be sure to use lead-free solder and a soldering iron that can meet specifications for use with lead-free solders for repairs accompanied by reworking of soldering.

- Compared with conventional eutectic solders, lead-free solders have higher melting points, by approximately 40 ºC.
  Therefore, for lead-free soldering, the tip temperature of a soldering iron must be set to around 373 ºC in general, although the temperature depends on the heat capacity of the PC board on which reworking is required and the weight of the tip of the soldering iron.

Do NOT use a soldering iron whose tip temperature cannot be controlled.

Compared with eutectic solders, lead-free solders have higher bond strengths but slower wetting times and higher melting temperatures (hard to melt/easy to harden).

The following lead-free solders are available as service parts:
- Parts numbers of lead-free solder:
  GYP1006 1.0 in dia.
  GYP1007 0.6 in dia.
  GYP1008 0.3 in dia.

1.2 WHEN REPLACING DVD DECK

WHEN REPLACING DVD DECK

[Removing the DVD Deck]

Before removing Pick Up PCB and DVD PCB connector, short circuit the position shown in **Fig. 1** using a soldering iron. If you remove the DVD Deck with no soldering, the Laser may be damaged.

[Installing the DVD Deck]

Remove all the soldering on the short circuit position after the connection of Pick Up PCB and DVD PCB connector.

NOTE

- Before your operation, please read “PREPARATION OF SERVICING” .
- Use the Lead Free solder.
- Manual soldering conditions
  - Soldering temperature: 320 ± 20˚C
  - Soldering time: Within 3 seconds
  - Soldering combination: Sn-3.0Ag-0.5Cu
- When Soldering/Removing of solder, use the draw in equipment over the Pick Up Unit to prevent the Flux smoke from it.

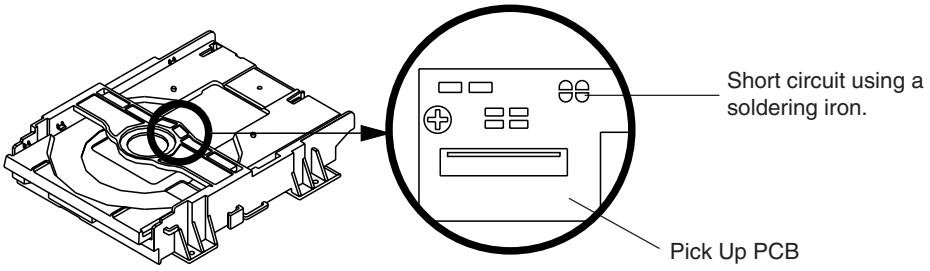

Fig. 1

1.3 DISC REMOVAL METHOD

DISC REMOVAL METHOD AT NO POWER SUPPLY

1. Slide the Rack Loading (White) toward the arrow direction by using a minus driver to release the lock. **(Refer to Fig. 1)**
2. Manually open the Tray.

NOTE: Please strongly pushing Rack Loading (White) to release the lock because the tray doesn't go out easily.

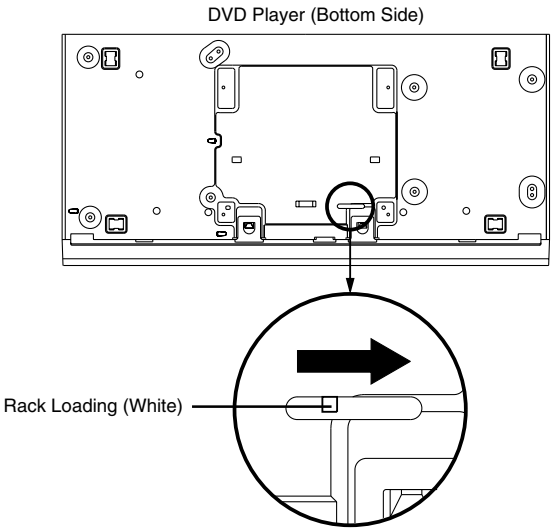

Fig. 1

PARENTAL CONTROL - RATING LEVEL

4 DIGIT PASSWORD CANCELLATION

If the stored 4 digit password in the Rating Level menu needs to be cancelled, please follow the steps below.

1. Set the DVD to the Stand-by Mode.
2. Press and hold the 'STOP' key on the front panel.
3. Simultaneously press and hold the POWER key on the front panel.
4. The 4 digit password has now been cleared.

NOTE: The above procedure will reset ALL of the player's settings to the default factory state.

PREPARATION OF SERVICING

The laser diode used for a pickup head may be destroyed with external static electricity. Moreover, even if it is operating normally after repair, when static electricity discharge is received at the time of repair, the life of the product may be shortened.
Please perform the following measure against static electricity, be careful of destruction of a laser diode at the time of repair.

- Place the unit on a workstation equipped to protect against static electricity, such as conductive mat.
- Soldering iron with ground wire or ceramic type is used.
- A worker needs to use a ground conductive wrist strap for body.

2. SPECIFICATIONS

2.1 ACCESSORIES

● Accessories

• Remote control ×1
(07650NU010)

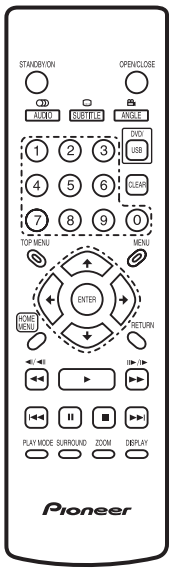

• Audio / Video cable(1.2m) ×1
(red/white/yellow)
(06CPBA2006)

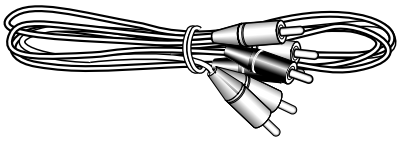

• Dry cell batteries ×2
(AA/R6P)

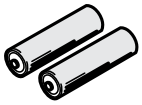

• Warranty Card
• Operating Instructions

2.2 SPECIFICATIONS

Specifications

General

Power requirements . . . . . .AC 120 V, 60 Hz
Power consumption . . . . . .11 W
Power consumption (standby). . . . . 0.7 W
Weight . . . . . 1.8 kg (3 lb 16 oz)
Dimensions
. . . . . 420 mm (W) x 49.5 mm (H) x 215 mm (D)
. . . . . (16-9/16 in. (W) x 1-15/16 in. (H) x 8-1/2 in. (D))
Operating temperature . . . . . .+5 °C to +35 °C
(+41 °F to +95 °F)
Operating humidity . . . . . 5 % to 85 %
(no condensation)

Component video output (Y, P_B, P_R)

Output level . . . . . .Y: 1.0 Vp-p (75 Ω)
P_B, P_R (color) 0.7 Vp-p (75 Ω)
Jacks . . . . . RCA

S-video output

Y (luminance) - Output level . . . . . 1 Vp-p (75 Ω)
C (color) - Output level . . . . . .286 mVp-p (75 Ω)
Jack . . . . . .4-pin mini DIN

Video output

Output level . . . . . 1 Vp-p (75 Ω)
Jack . . . . . RCA

Audio output (1 stereo pair)

Output level . . . . . During audio output
200 mVrms (1 kHz, –20 dB)
Number of channels 2
Jacks . . . . . RCA

HDMI output

HDMI output . . . . . 19 pin

Digital audio characteristics

Frequency response . . . . . .4 Hz to 44 kHz
S/N ratio. . . . . .115 dB
Dynamic range. . . . . .100 dB
Total harmonic distortion . . . . . 0.0025 %
Wow and flutter. . . . . .Limit of measurement
(±0.001 % W. PEAK) or lower

Digital output

Coaxial digital output . . . . . .RCA jack

Accessories

Remote control 1
AA/R6P dry cell batteries 2
Audio/video cable (red/white/yellow plugs) 1
Warranty card 1
Operating instructions

The specifications and design of this product are subject to change without notice, due to improvement.

2.3 DISC/CONTENT FORMAT

Disc/content format playback compatibility

This player is compatible with a wide range of disc types (media) and formats. Playable discs will generally feature one of the following logos on the disc and/or disc packaging. Note however that some disc types, such as recordable CD and DVD, may be in an unplayable format–see below for further compatibility information.

Please also note that recordable discs cannot be recorded using this player.

DVD-Video DVD-R DVD-RW

Audio CD Video CD CD-R CD-RW

Fujicolor CD

- This unit will play DVD+R/+RW discs.
- *is a trademark of DVD Format/Logo Licensing Corporation.*
- *is a trademark of Fuji Photo Film Co. Ltd.*
- Also compatible with KODAK Picture CD

About DualDisc playback

A DualDisc is a new two -sided disc, one side of which contains DVD content video, audio, etc. while the other side contains non-DVD content such as digital audio material.

The non-DVD, audio side of the disc is not compliant with the CD Audio specification and therefore may not play.

The DVD side of a DualDisc plays in this product. DVD-Audio content will not play.

For more detailed information on the DualDisc specification, please refer to the disc manufacturer or disc retailer.

CD-R/-RW compatibility

- Compatible formats: CD-Audio, Video CD, ISO 9660 CD-ROM* containing MP3, WMA, MPEG-4 AAC, JPEG or DivX video/ WMV files
  ** ISO 9660 Level 1 or 2 compliant. CD physical format: Mode1, Mode2 XA Form1. Romeo and Joliet file systems are both compatible with this player.*
- Multi-session playback: No
- Unfinalized disc playback: No
- File structure (may differ): Up to 299 folders on a disc; up to 648 folders and files (combined) within each folder

DVD+R/DVD+RW compatibility

Only DVD+R/DVD+RW discs recorded in 'Video Mode (DVD Video Mode)' which have been finalized, can be played back. However, some editing made during the recording may not be played back accurately.

DVD-R/-RW compatibility

- Compatible formats: DVD-Video, Video Recording (VR)*
  ** Edit points may not play exactly as edited; screen may go momentarily blank at edited points.*
- Unfinalized playback: No
- MP3/WMA/MPEG-4 AAC/JPEG or DivX video/WMV file playback on DVD-R/-RW: No

Compressed audio compatibility

- Compatible formats: MPEG-1 Audio Layer 3 (MP3), Windows Media Audio (WMA), MPEG-4 AAC
- Sampling rates: 32 kHz, 44.1 kHz or 48 kHz
- Bit-rates: Any (128 kbps or higher recommended)
- VBR (variable bit rate) MP3/WMA/MPEG-4 AAC playback: No
- WMA lossless encoding compatible: No
- DRM (Digital Rights Management) compatible: No (DRM-protected audio files will not play in this player–see also DRM in the Glossary on page 59)
- File extensions: .mp3, .wma, .m4a (these must be used for the player to recognize MP3, WMA and MPEG-4 AAC files – do not use for other file types)

About MPEG-4 AAC

Advanced Audio Coding (AAC) is at the core of the MPEG-4 AAC standard, which incorporates MPEG-2 AAC, forming the basis of the MPEG-4 audio compression technology. The file format and extension used depend on the application used to encode the AAC file. This unit plays back AAC files encoded by iTunes© bearing the extension '**.m4a**'. DRM-protected files will not play, and files encoded with some versions of iTunes© may not play, or filenames may display incorrectly.
Apple and iTunes are trademarks of Apple Inc., registered in the U.S. and other countries.

WMA (Windows Media™ Audio) compatibility

This player can playback Windows Media Audio content. WMA is an acronym for Windows Media Audio and refers to an audio compression technology developed by Microsoft Corporation. WMA content can be encoded by using Windows Media Player for Windows XP, Windows Media Player 9 or Windows Media Player 10 series.
Windows Media is a trademark of Microsoft Corporation. This product includes technology owned by Microsoft Corporation and cannot be used or distributed without a license from Microsoft Licensing, Inc.

About DivX video

DivX is a media technology created by DivX, Inc. DivX media files contain not only video but also include advanced media features like menus, subtitles, and alternate audiotracks. This player can play DivX videos burned on CD-R/-RW/-ROM discs. Keeping the same terminology as DVD-Video, individual DivX video files are called ˝Titles˝. When naming files/titles on a CD-R/-RW disc prior to burning, keep in mind that by default they will be played in alphabetical order.

DivX video compatibility

- Official DivX© Certified product.
- Plays all versions of DivX© video (including DivX© 6) with standard playback of DivX© media files.
- File extensions: .avi and .divx (these must be used for the player to recognize DivX video files). *Note that all files with the .avi extension are recognized as MPEG4, but not all of these are necessarily DivX video files and therefore may not be playable on this player.*

About WMV

WMV is an acronym for Windows Media Video and refers to a video compression technology developed by Microsoft Corporation. WMV content can be encoded by using Windows Media® Encoder.
This player is compatible with WMV9 files that are encoded by using the Windows Media® Encoder 9 Series, with .wmv as an extension.
Compatible with size under 720 x 576 pixels/ 720 x 480 pixels.
Advanced Profile is not supported.

JPEG file compatibility

- Compatible formats: Baseline JPEG and EXIF 2.2* still image files up to a resolution of 3072 x 2048.
  * *File format used by digital still cameras.*
- Progressive JPEG compatible: No
- File extensions: .jpg (must be used for the player to recognize JPEG files – do not use for other file types)

PC-created disc compatibility

Discs recorded using a personal computer may not be playable in this unit due to the setting of the application software used to create the disc. In these particular instances, check with the software publisher for more detailed information.
Discs recorded in packet write mode (UDF format) are not compatible with this player.Check the DVD-R/-RW or CD-R/-RW software disc boxes for additional compatibility information.

2.4 PANEL FACILITIES

2.4.1 FRONT PANEL SECTION

Front panel

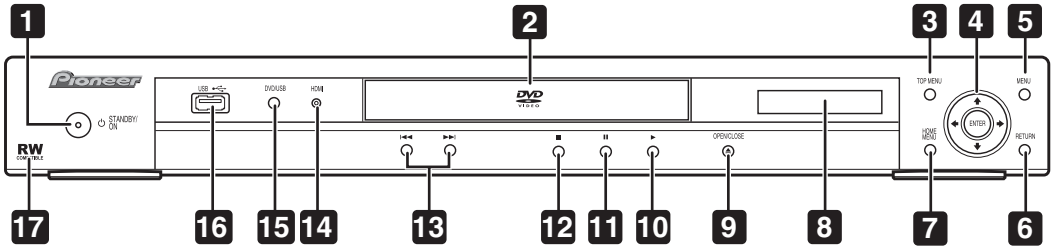

1 ⏻ STANDBY/ON
Press to switch the player on or into standby.

2 Disc tray

3 TOP MENU
Displays the 'top menu' of a DVD disc—this varies with the disc.

4 ENTER & cursor buttons
Selects the current menu option.

5 MENU
Displays a DVD disc menu—this varies with the disc and may be the same as the 'top menu'.

6 RETURN
Returns to the previously dis-played menu screen.

7 HOME MENU

8 Display
Description of the display.

9 ⏏ OPEN/CLOSE
Press to open or close the disc tray.

10 ►
Press to start or resume playback.

11 ❚❚
Press to pause playback. Press again to restart.

12 ■
Press to stop the disc (you can resume play-back by pressing ► (play)).

13 ⏮ and ⏭
- Press and hold for fast reverse/forward scanning.
- Press to jump to the previous/next chapter or track.

14 HDMI indicator
Lights when this player is recognized by another HDMI or DVI/HDCP compatible component.

15 DVD/USB

16 USB port (Type A)

17 RW Compatible
This mark indicates compatibility with DVD-RW discs recorded on a DVD recorder in Video Recording mode.

2.4.2 REMOTE CONTROL

Remote control

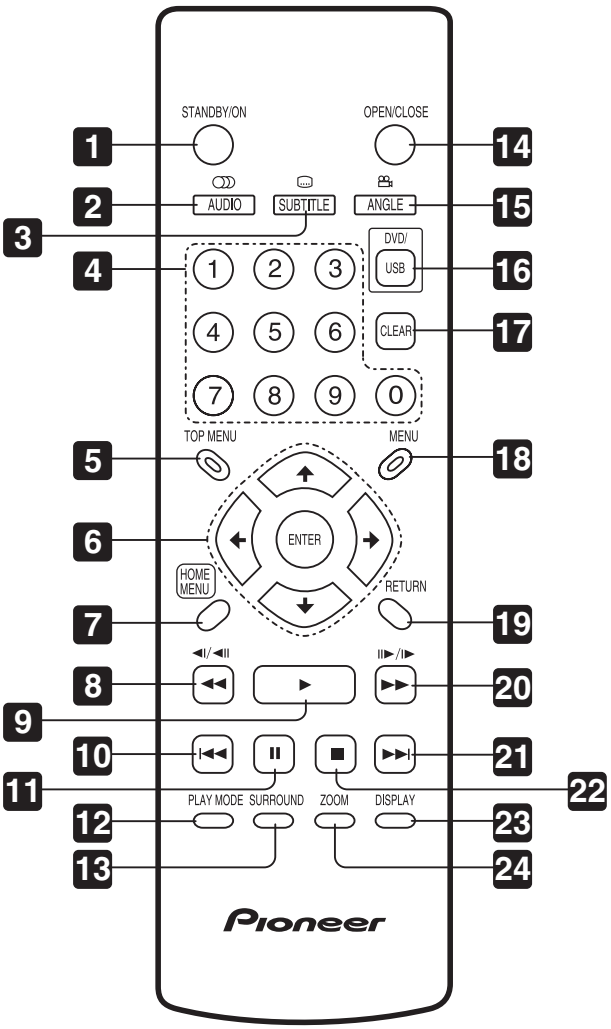

1 ⏻ STANDBY/ON
Press to switch the player on or into standby.

2 AUDIO
Press to select the audio channel or language.

3 SUBTITLE
Press to select a subtitle display.

4 Number buttons

5 TOP MENU
Press to display the top menu of a DVD disc.

6 ENTER & cursor buttons

Use to navigate on-screen displays and menus. Press **ENTER** to select an option or execute a command.

7 HOME MENU
Press to display (or exit) the on-screen display.

8 ◄◄ and ◄I/◄II
Use for reverse slow motion playback, frame reverse and reverse scanning.

9 ►
Press to start or resume playback.

10 I◄◄
chapter or track, then to previous chapters/ tracks.

11 II
Press to pause playback; press again to restart.

12 PLAY MODE
Press to display the Play Mode menu. (You can also get to the Play Mode menu by pressing **HOME MENU** and selecting Play Mode).

Press to jump to the beginning of the current

13 SURROUND
Press to activate/switch off DDV/SRS TruSurround.

14 ⏏ OPEN/CLOSE
Press to open or close the disc tray.

15 ANGLE
Press to change the camera angle during DVD multi-angle scene playback.

16 DVD/USB
Press to turn to USB mode and return to DVD mode.

17 CLEAR
Press to clear a numeric entry.

18 MENU
Press to display a DVD disc menu, or the Disc Navigator if a VR format DVD-RW, CD, Video CD , MP3, WMA or JPEG disc is loaded.

19 RETURN

Press to return to a previous menu screen.

20 ►► and I►/II►

Use for forward slow motion playback, frame advance and forward scanning.

21 ►►I

Press to jump to the next chapter or track.

22 ■

Press to stop the disc (you can resume playback by pressing ►(play)).

23 DISPLAY

Press to display information about the disc playing.

24 ZOOM

Press to change the zoom level.

3. BASIC ITEMS FOR SERVICE

3.1 CHECK POINTS AFTER SERVICING

Check points after servicing (DVD player)

To keep the product quality after servicing, confirm recommended check points shown below.

No.	Procedure	Check points
1	Confirm the firmware version on Service Mode.	The version of the firmware must be latest. Update firmware to the latest one, if it is not the latest.
2	Confirm whether the customer complain has been solved. If the customer complain occurs with the specific disc, use it for the operation check.	The customer complain must not be reappeared. Video, audio and operations must be normal.
3	Confirm playback error rates at the innermost and outermost tracks by using the following disc. DVD test disc (GGV1025)	The error rates must be less than 5.0e-4.
4	Play back a DVD. (Menu operation, Title/chapter search)	Audio and operations must be normal.
5	Play back a DVD. (Menu operation, Title/chapter search)	Video, audio and operations must be normal.
6	Check the appearance of the product.	No scratches or dirt on its appearance after receiving it for service.

See the table below for the items to be checked regarding video and audio:

Items to be checked regarding video	Item to be checked regarding audio
Block noise	Distortion
Horizontal noise	Noise
Dot noise	Volume too low
Disturbed image (video jumpiness)	Volume too high
Too dark	Volume fluctuating
Too bright	Sound interrupted
Mottled color	

3.2 PCB LOCATIONS

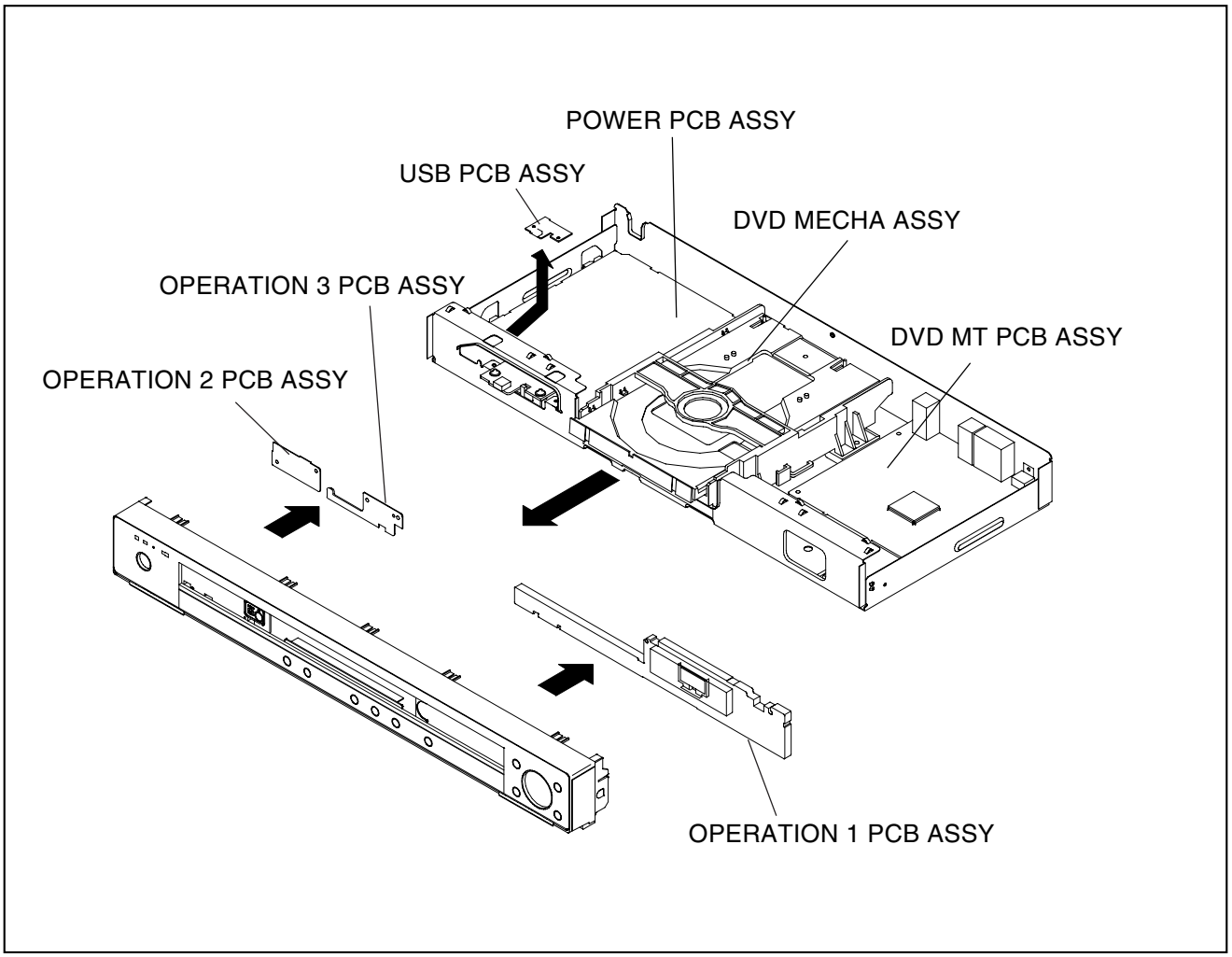

Mark	No.	Description	Part No.
LIST OF ASSEMBLIES			
	1	DVD MT PCB ASSY	A2K404A130
	1	OPERATION 1 PCB ASSY	A2K404A270
	1	OPERATION 2 PCB ASSY	A2K401A280
	1	OPERATION 3 PCB ASSY	A2K401ADF0
⚠	1	POWER PCB ASSSY	A2K404A240
	1	USB PCB ASSY	A2K401ADD0
	1	DVD MECHA ASSY	A2K001A650

3.3 JIGS LIST

■ Jigs list

Name	Jig No.	Remarks
Service Remote Control Unit	GGF1381	diagnosis
DVD Test Disc (DVD-Video,NTSC)	GGV1025	Operation Check
DVD Test Disc (DVD-Video,PAL)	GGV-1101	Operation Check
CD Test Disc	STD-905	Operation Check

■ Lubricants and Glues list

Name	Lubricants and Glues No.	Remark
Daifree	GEM1036 (ZLX-ME413A)	Refer to "9.3 06 DVD MECHA SECTION"
Grease	GYA1001 (ZLB-PN397B)	Refer to "9.3 06 DVD MECHA SECTION"
Grease	GEM1018	Refer to "9.3 06 DVD MECHA SECTION"

■ Cleaning

• Before shipping out the product, be sure to clean the following positions by using the prescribed cleaning tools:

Position to be cleaned	Cleaning tools	Remark
Pickup leneses	Cleaning liquid : GEM1004	
	Cleaning paper : GED-008	

4. BLOCK DIAGRAM

4.1 OVERALL WIRING CONNECTION DIAGRAM

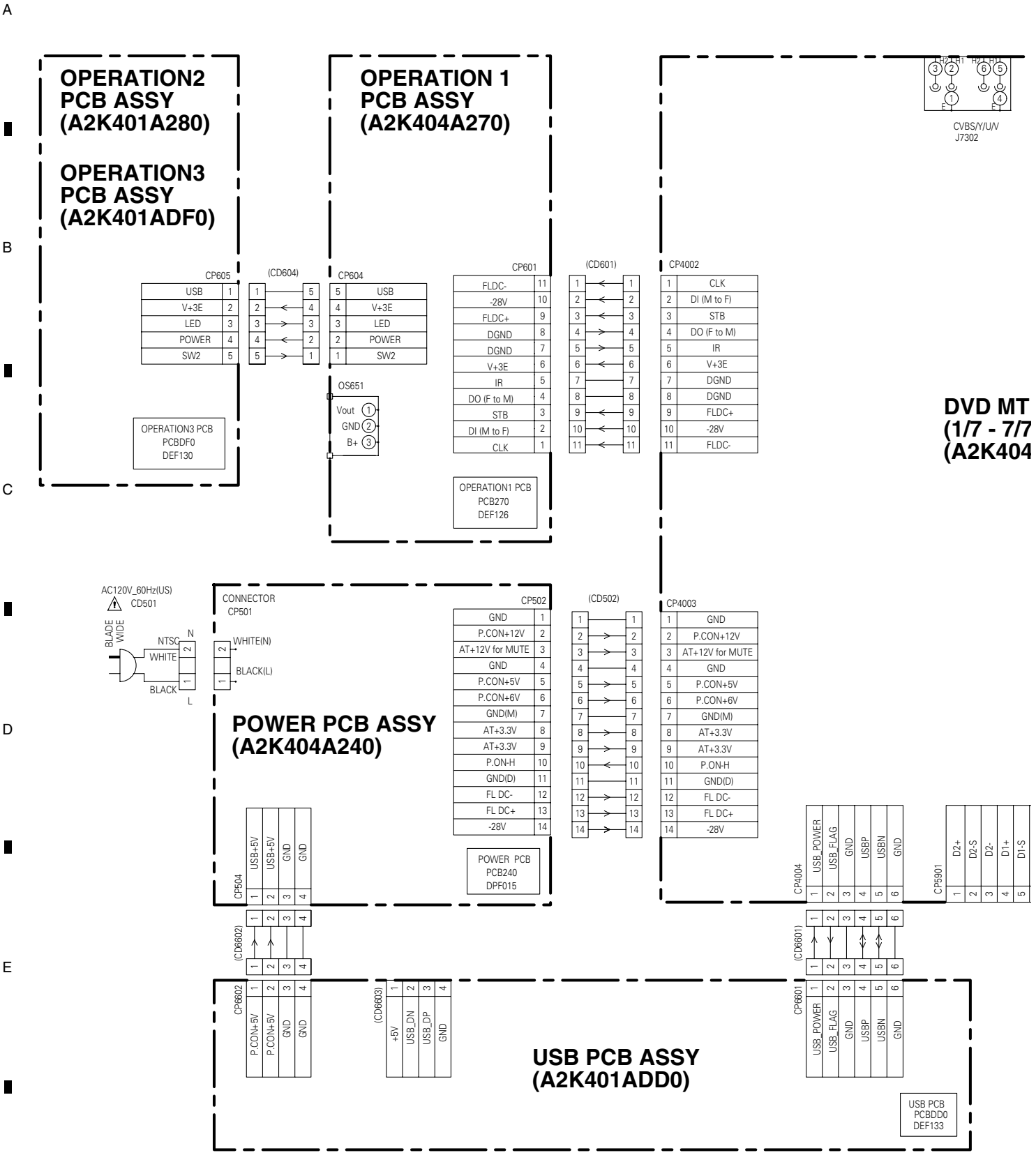

NOTE: THE TIMETHIS INTERCONNECTION DIAGRAM IS THE LATEST AT OF PRINTING AND SUBJECT TO CHANGE WITHOUT NOTICE.

ATTENTION: LES PIECES REPAREES PAR UN ⚠ ETANT DANGEREUSES AN POINT DE VUE SECURITE N'UTILISER QUE CELLS DECRITES DANS LA NOMENCLATURE DES PIECES.

CAUTION: SINCE THESE PAF CRITICAL FOR SA DESCRIBED IN PA

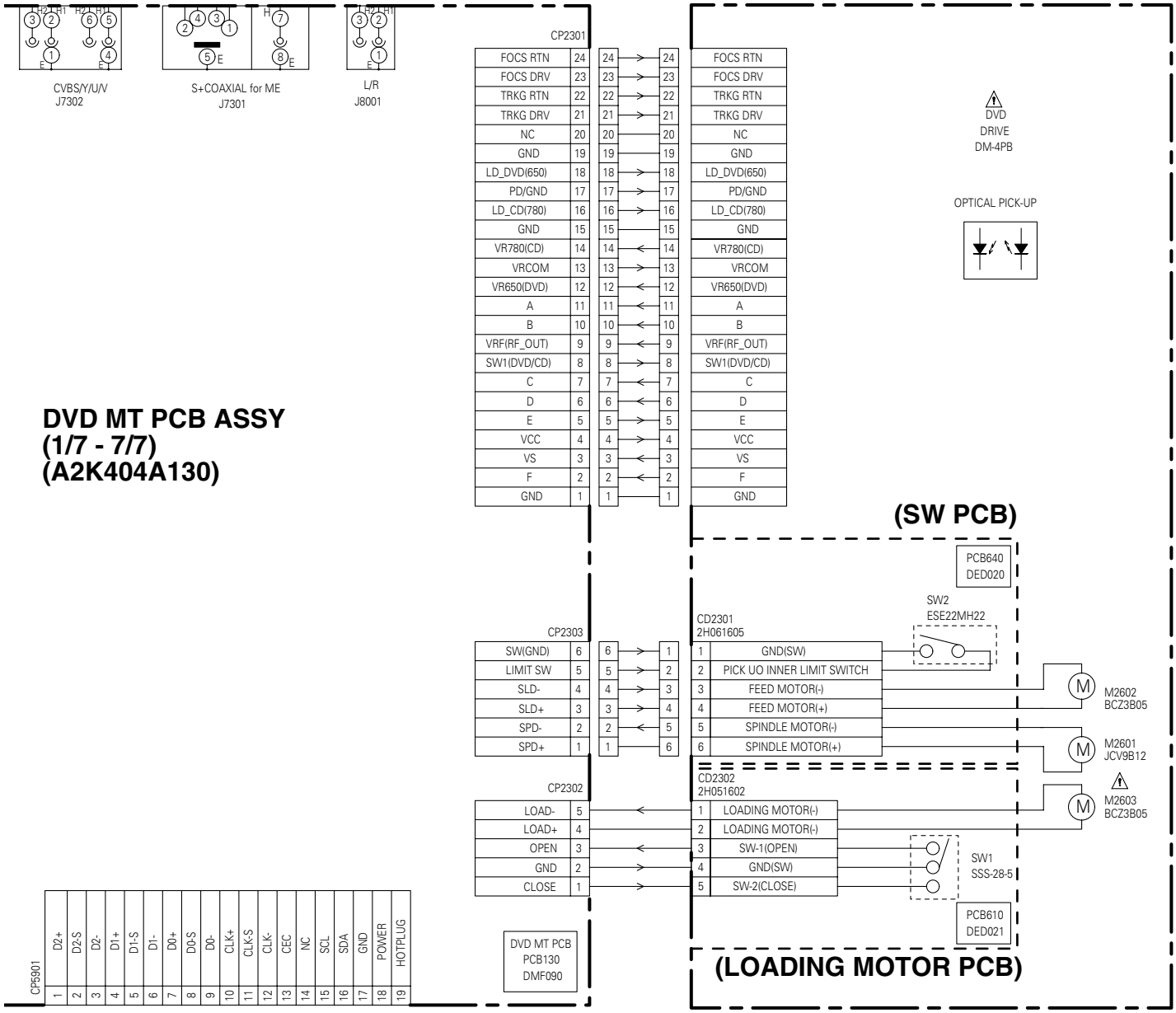

ON: SINCE THESE PARTS MARKED BY ⚠ ARE CRITICAL FOR SAFETY,USE ONES DESCRIBED IN PARTS LIST ONLY.

4.2 OVERALL BLOCK DIAGRAM

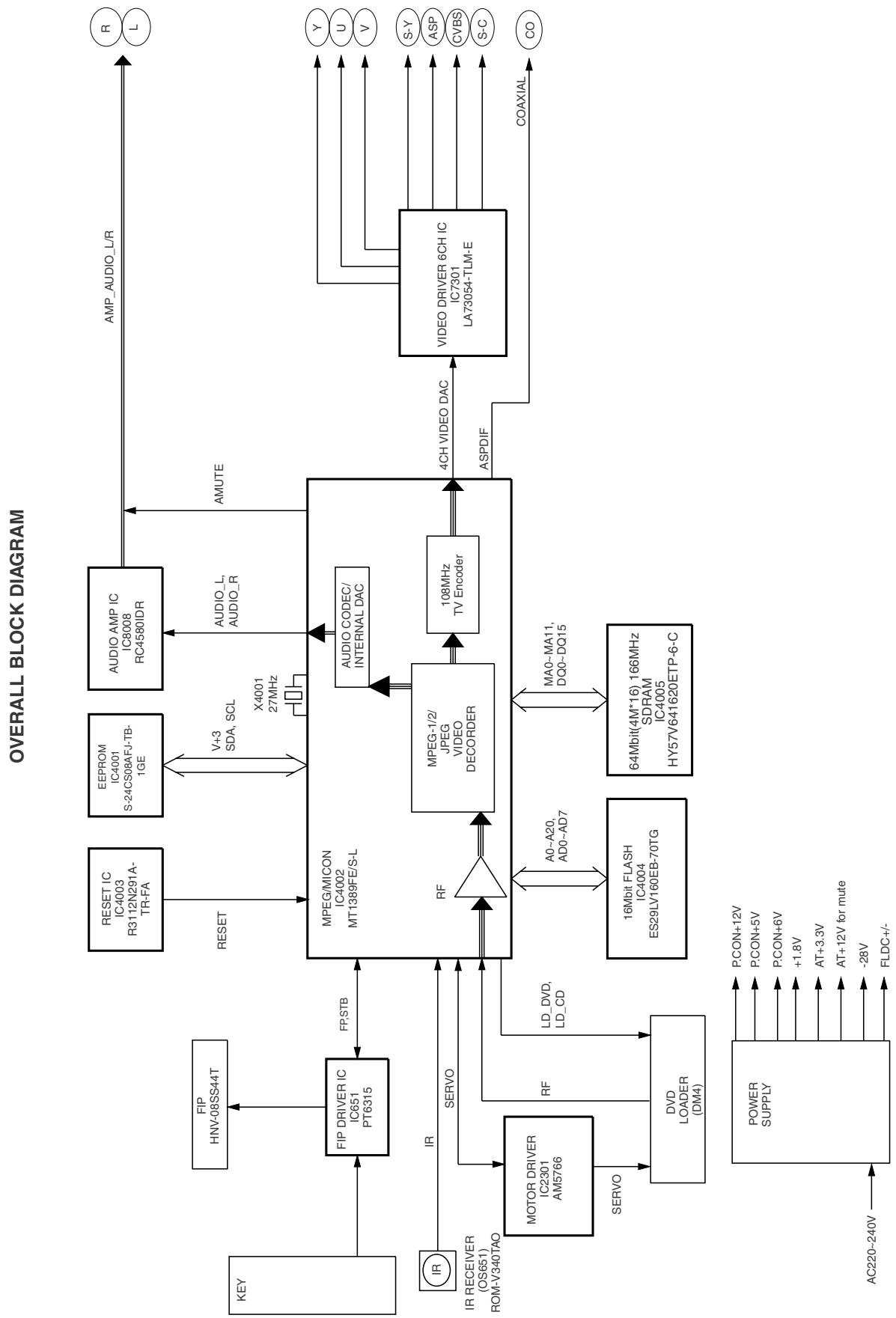

4.3 DVD LOADER BLOCK DIAGRAM

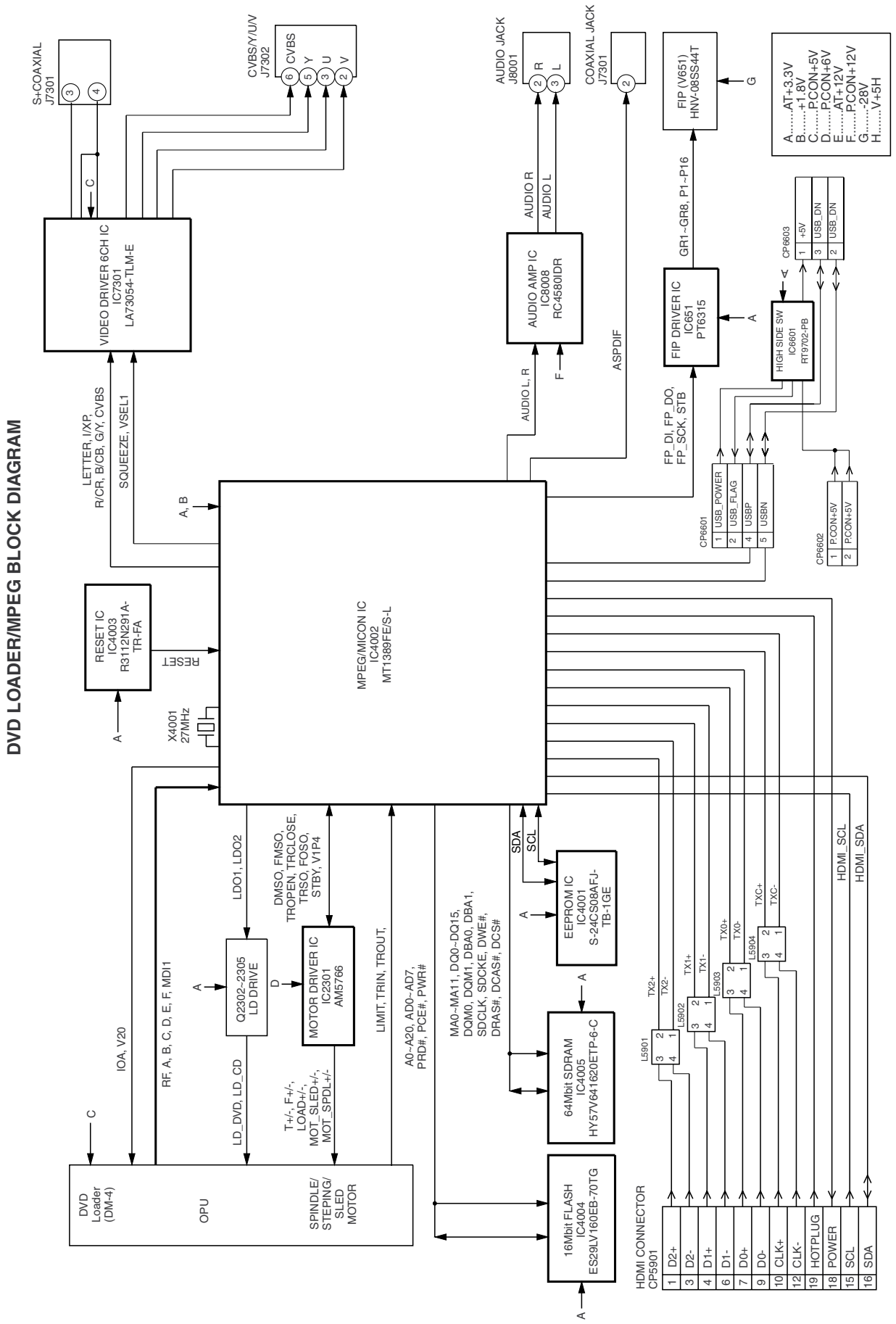

4.4 POWER BLOCK DIAGRAM

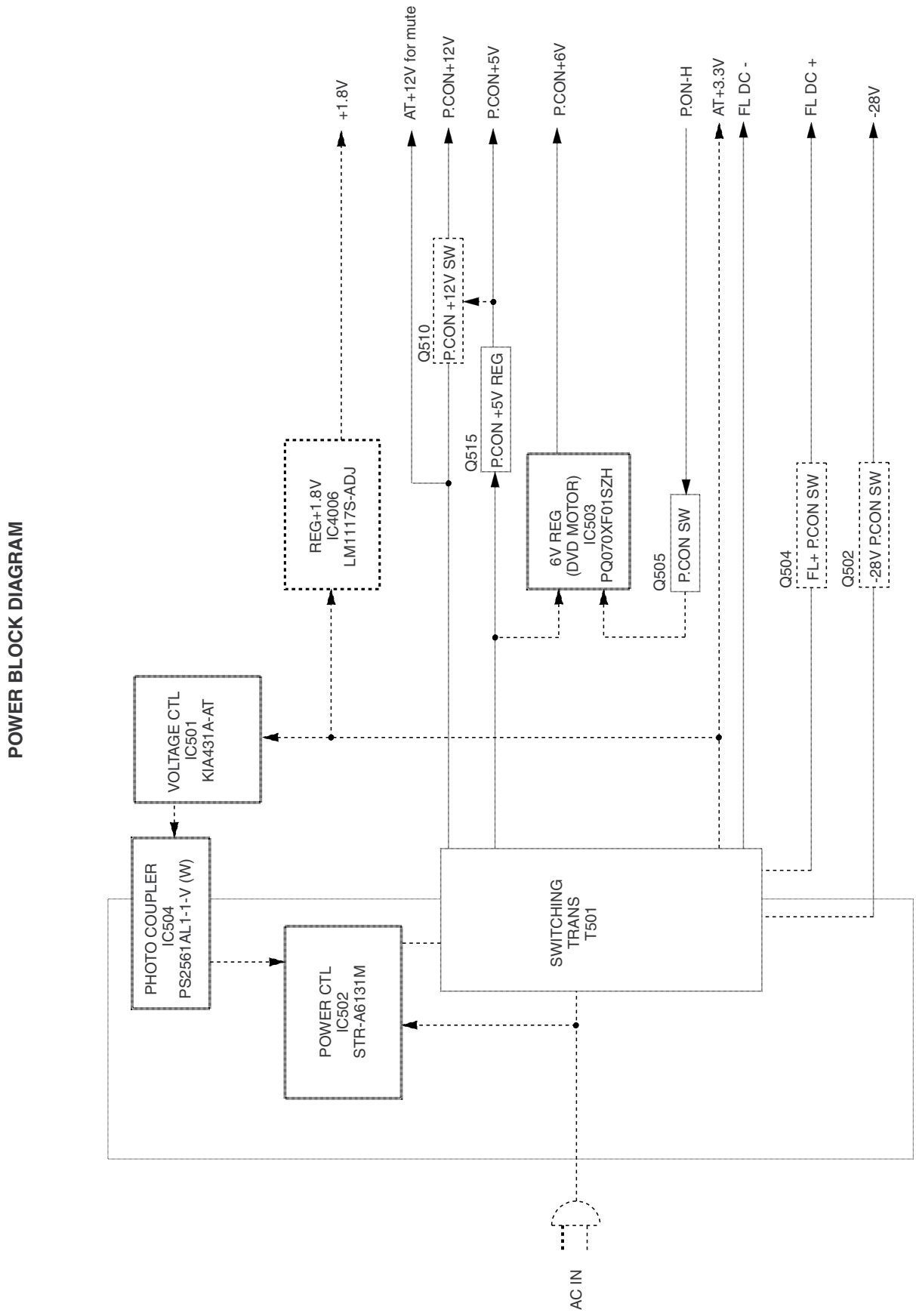

5. DIAGNOSIS

5.1 TROUBLE SHOOTING

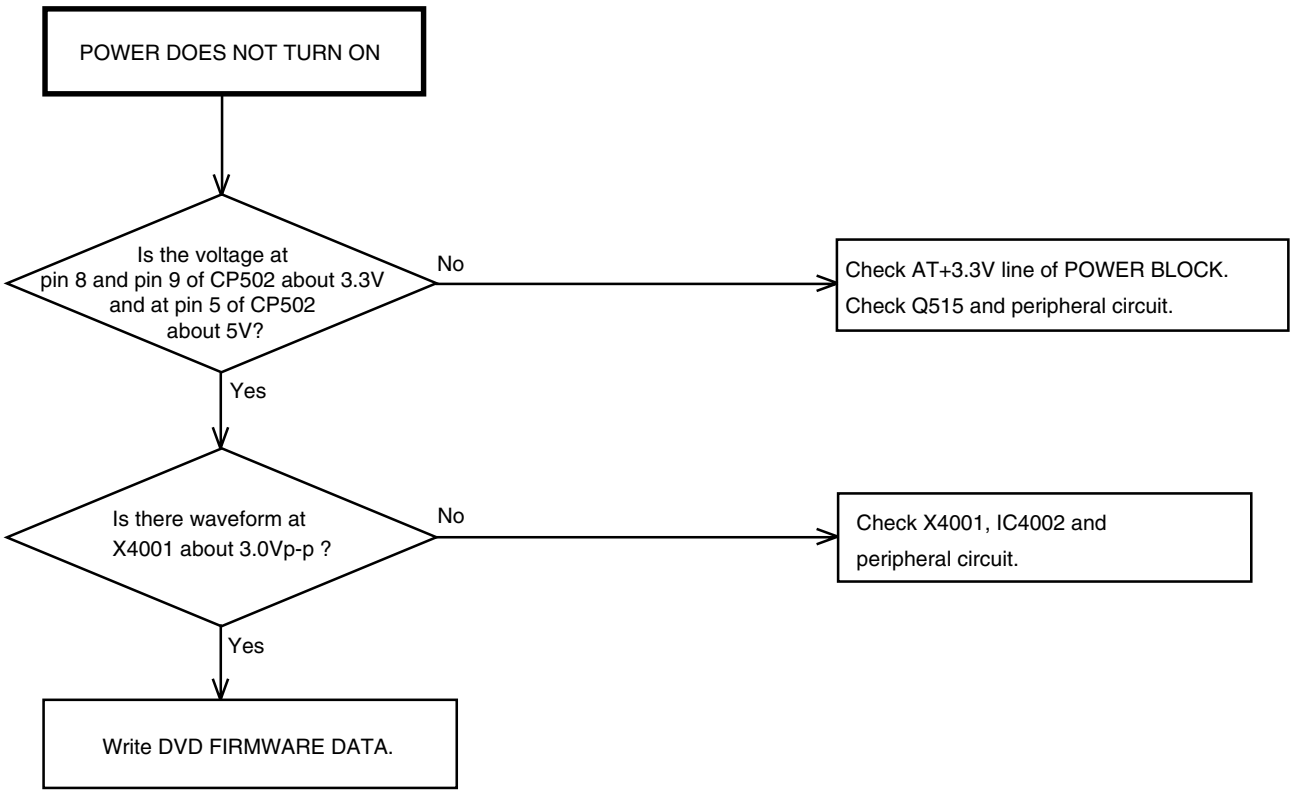

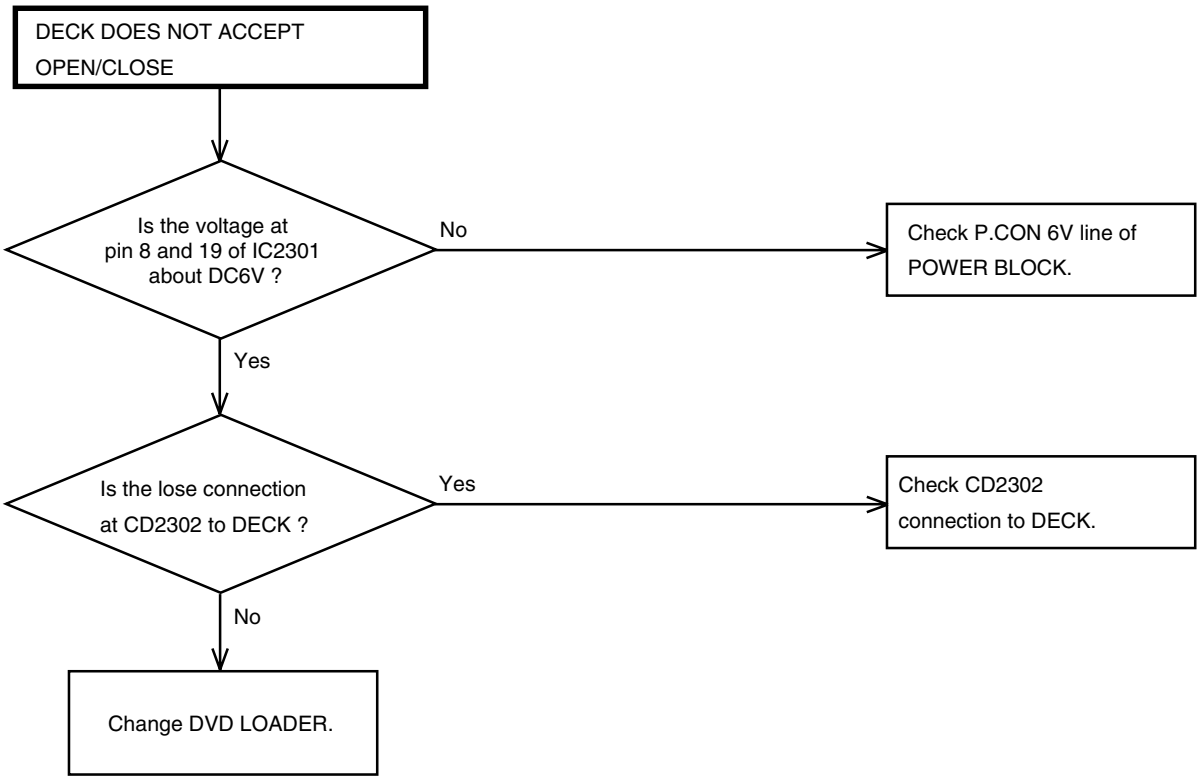

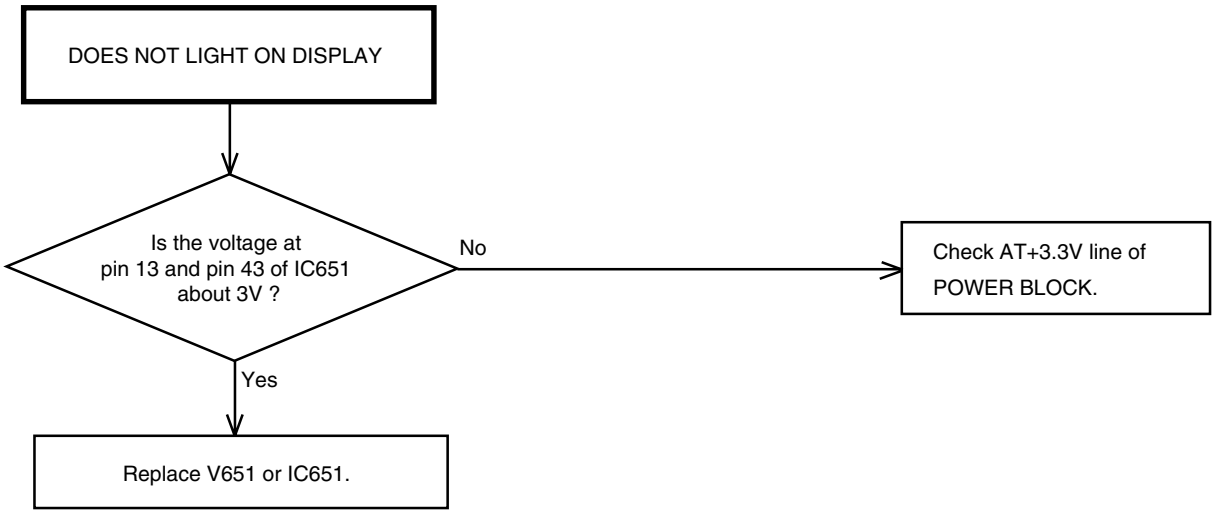
DOES NOT LIGHT ON DISPLAY
Is the voltage at pin 13 and pin 43 of IC651 about 3V ?
No
Check AT+3.3V line of POWER BLOCK.
Yes
Replace V651 or IC651.

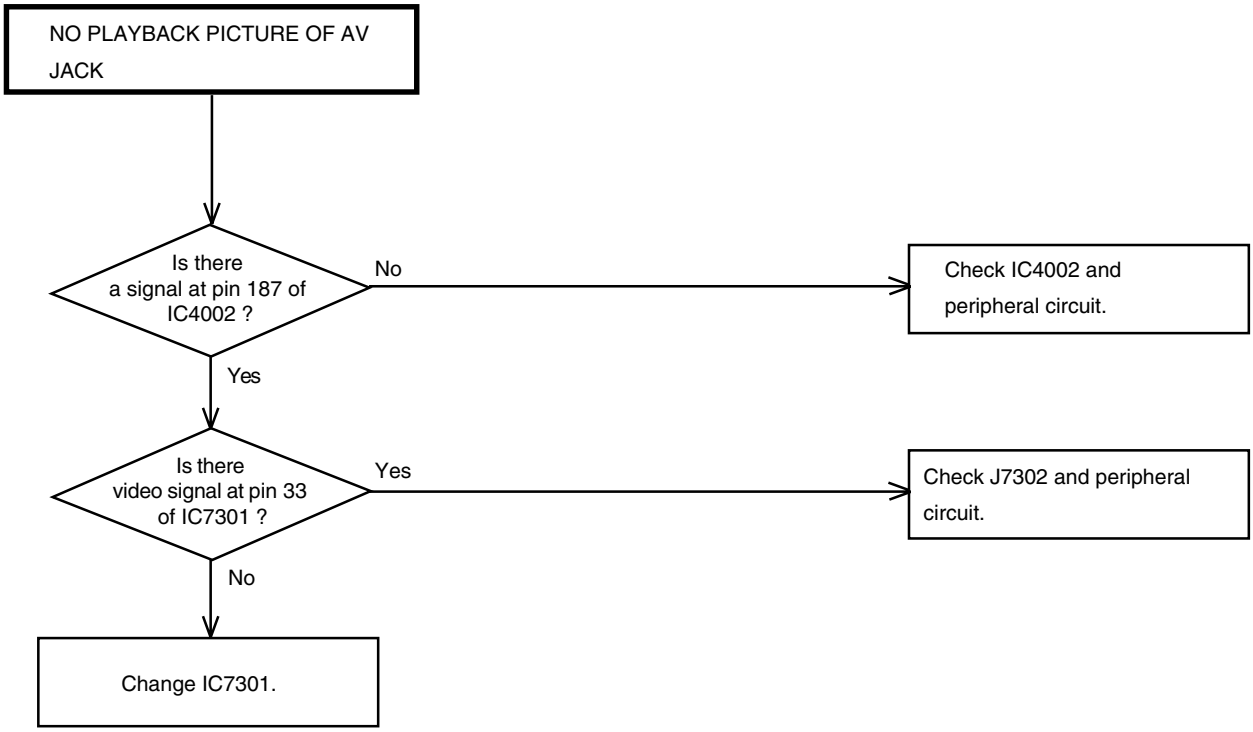
NO PLAYBACK PICTURE OF AV JACK
Is there a signal at pin 187 of IC4002 ?
No
Check IC4002 and peripheral circuit.
Yes
Is there video signal at pin 33 of IC7301 ?
Yes
Check J7302 and peripheral circuit.
No
Change IC7301.

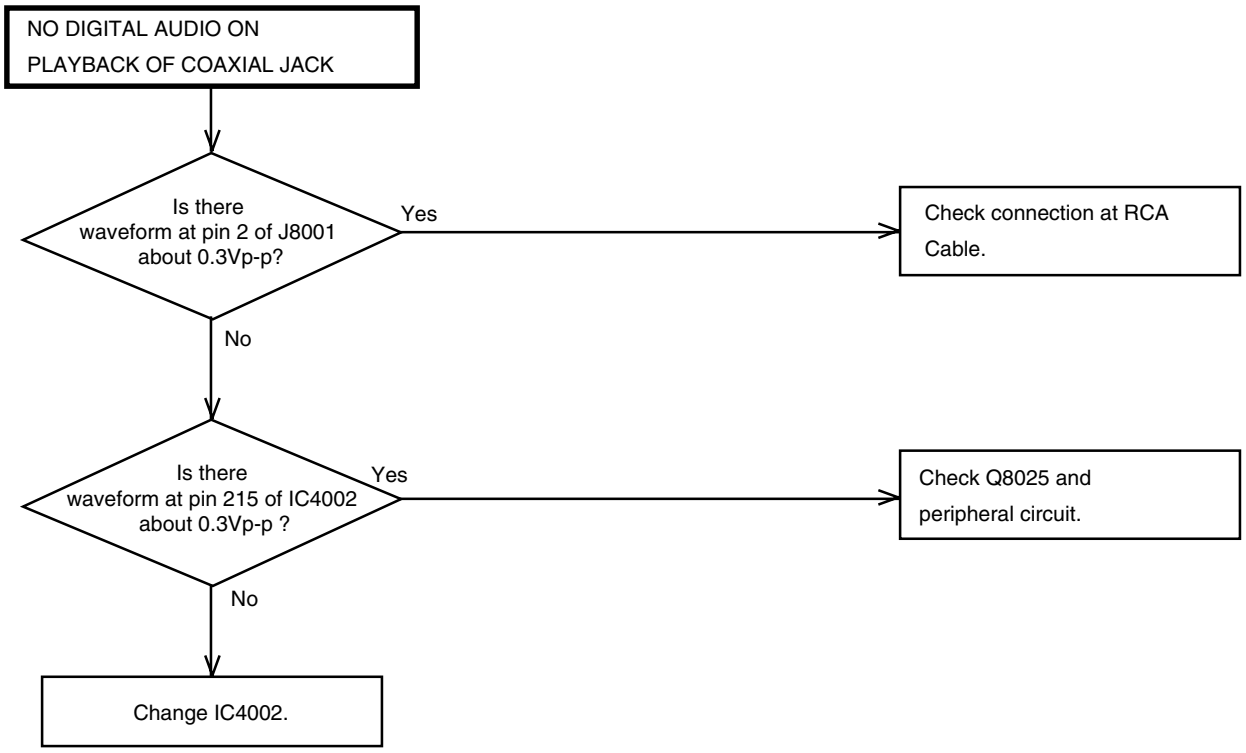
NO DIGITAL AUDIO ON PLAYBACK OF COAXIAL JACK
Is there waveform at pin 2 of J8001 about 0.3Vp-p?
Yes
Check connection at RCA Cable.
No
Is there waveform at pin 215 of IC4002 about 0.3Vp-p ?
Yes
Check Q8025 and peripheral circuit.
No
Change IC4002.

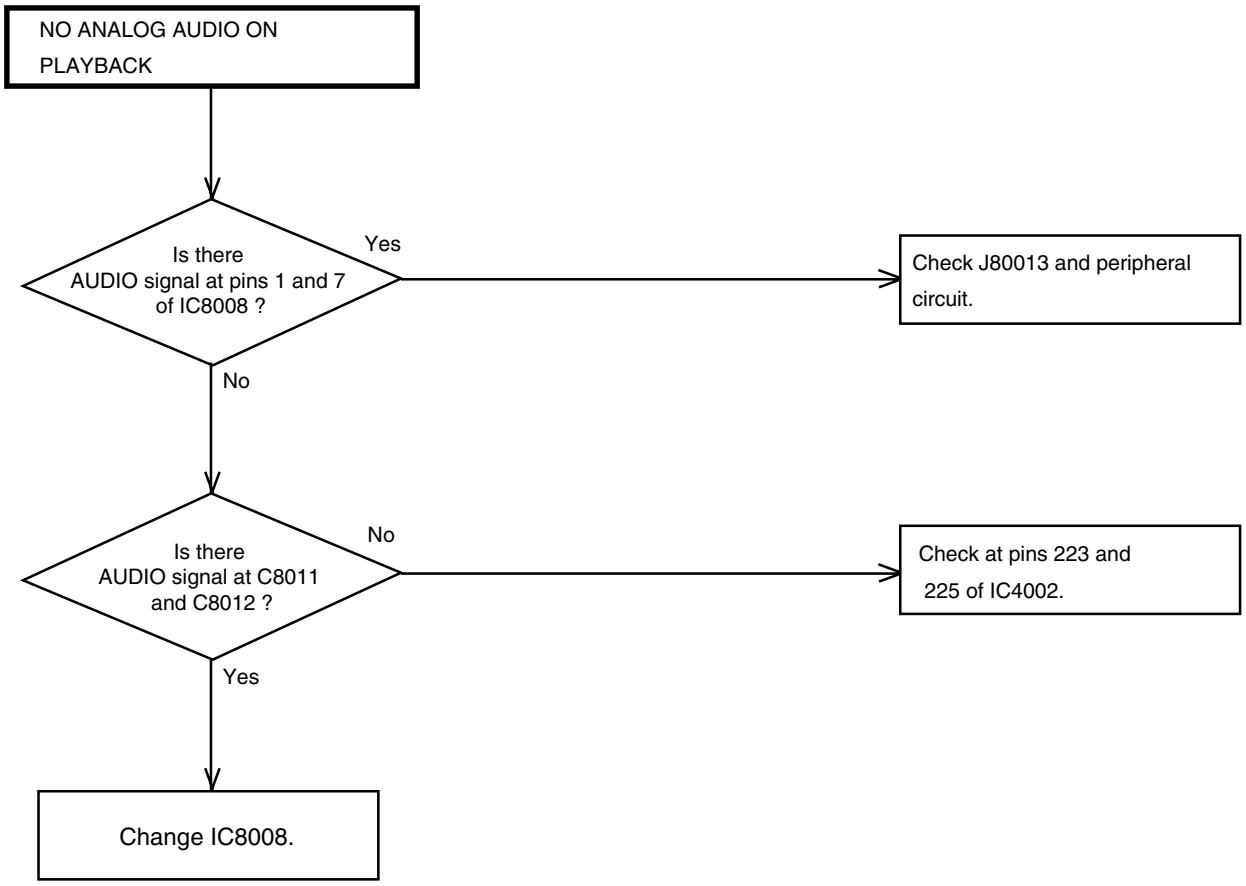
NO ANALOG AUDIO ON PLAYBACK
Is there AUDIO signal at pins 1 and 7 of IC8008 ?
Yes
Check J80013 and peripheral circuit.
No
Is there AUDIO signal at C8011 and C8012 ?
No
Check at pins 223 and 225 of IC4002.
Yes
Change IC8008.

● Symptoms That May Occur When Any Of The Following ICs Is In Failure

IC	Symptoms
EEPROM (DVD MT PCB Assy : IC4001)	User's data cannot be stored in memory. The ID number is lost.
16M Flash ROM (DVD MT PCB Assy : IC4004)	The power cannot be turned on. Downloading of the firmware cannot be performed.
DVD IC (DVD MT PCB Assy : IC4002)	Any kind of symptoms (no power, a failure in any of the servo, video and audio systems, etc.) may be generated, because the DVD processing is performed by a single chip.
64M SDRAM (DVD MT PCB Assy : IC4005)	No power. Block noise is generated during playback.

5.2 METHOD FOR DIAGNOSING DEGRADATION OF THE LDS ON THE PICKUP ASSY

Case when this diagnosis is required :
When playback of any disc, including a test disc (DVD: GGV1025, CD: STD-905), cannot be performed

■ How to diagnose

In the case mentioned above, degradation of the laser diodes (LDs) mounted on the PICKUP Assy is suspected.
Measure the voltage between the two ends of one of the resistors mentioned below.

- **No playback of a DVD :**

  Measure the voltage between the two ends of R2321 or R2323 on the DVDM Assy. If the voltage is 0.4 V or higher, the 650-nm LD is degraded.

- **No playback of a CD :**

  Measure the voltage between the two ends of R2320 or R2322 on the DVDM Assy. If the voltage is 0.4 V or higher, the 780-nm LD is degraded.

If the measurements show degradation of an LD, replace the PICKUP Assy.

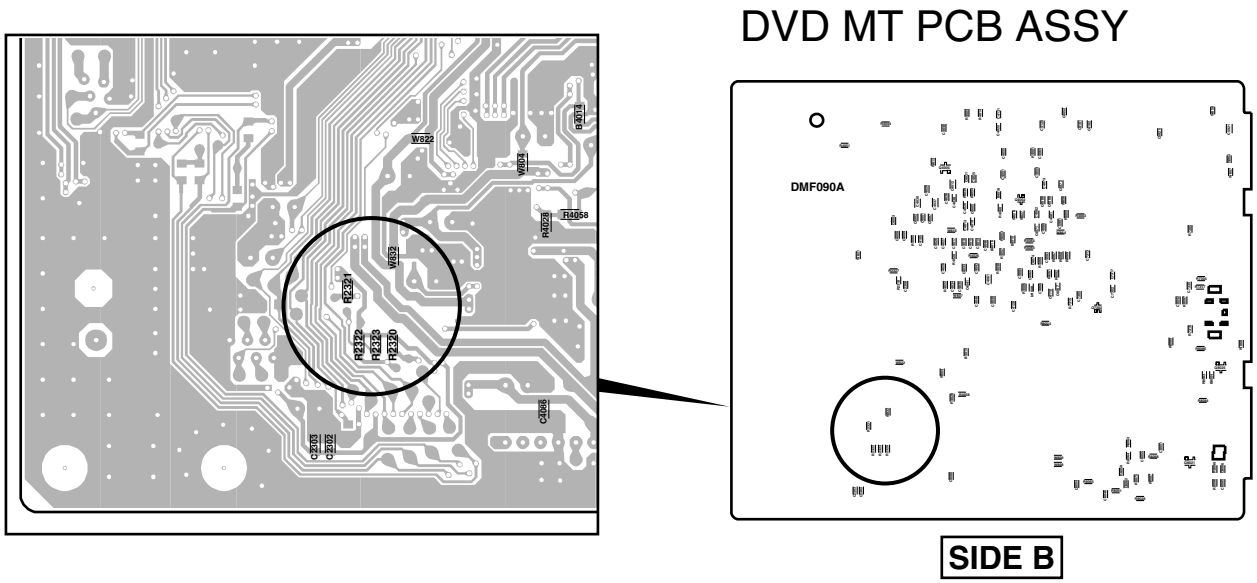

6. SERVICE MODE

6.1 SERVICE MODE PROCEDURE

POWER ON

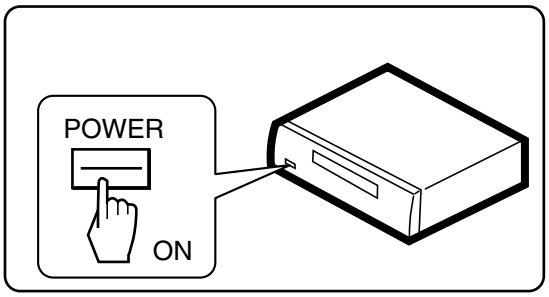

DISC SET

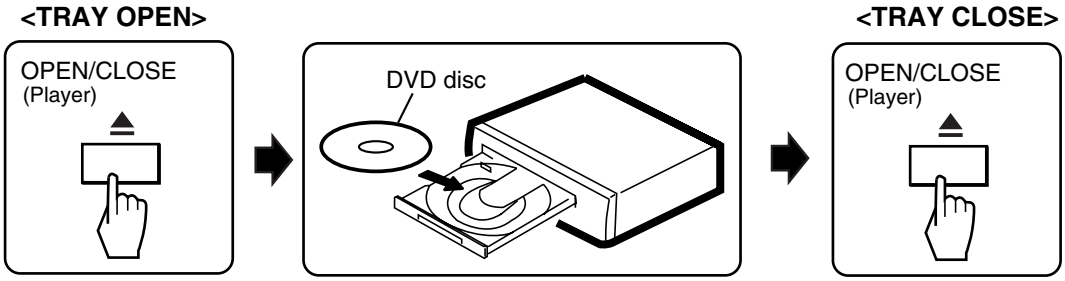

SERVICE MODE: PLAY

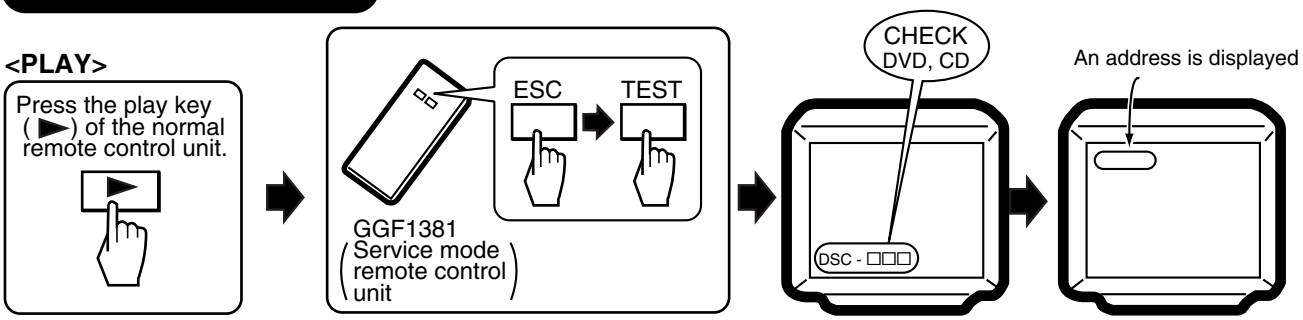

Notes:
- After going into service mode, if you play back the disc, "DISC-NON" is displayed.
- The video signal and the audio signal are outputted during the servicemode.
- The SKIP key and the SCAN key are effective during the service mode.

SERVICE MODE: OFF

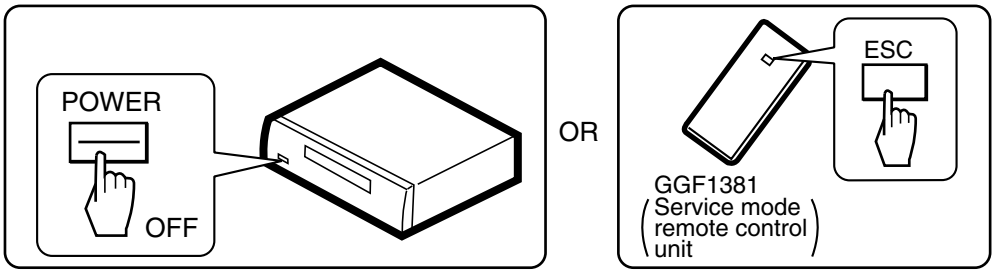

6.2 SERVICE MODE IN

Service Mode Functional Specification

① Service mode entry

In the power ON state, press the [ESC] (A8-5F) key and [TEST / RANDOM] (A8-5E) key in order of the Service mode remote control unit.

- Light the all FL and LEDs.
- OSD displays test mode.

Note:

* When pressing the keys of something, the FL displays "NO DISC" and the LED lighting disappears.

② Release the Service mode

- Turn off the power.
- Press the [ESC] (A8-5F) key of the remote control unit.

③ LD ON

DVD : Press the [TEST] (A8-5E) and [1] (A8-01) keys in order, and turn on the laser diode (650n).
CD : Press the [TEST] (A8-5E) and [4] (A8-04) keys in order, and turn on the laser diode (780n).

6.3 DISPLAY SPECIFICATION OF THE SERVICE MODE

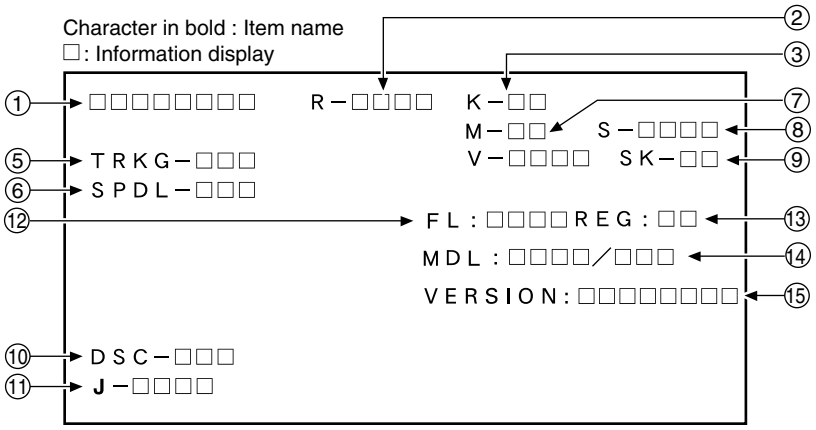

① **Address indication**
The address being traced is displayed in number.
(as for the DVD, indication of decimal number is possible.)
DVD : ID indication (hexadecimal number, 8 digits)
[＊＊＊＊＊＊＊＊]
CD : ID indication [＊＊＊＊＊＊＊＊]

② **Code indication of remote control unit [R – ＊＊＊＊]**
In case of double code, display a 2nd code.

③ **Main unit keycode indication [K – ＊＊]**

⑤ **Tracking status [TRKG – ＊＊＊]**
Tracking on : [ON]
Tracking off : [OFF]

⑥ **Spindle status [SPDL – ＊＊＊]**
[OFF], [CLV]

⑦ **Mechanism (loading) position value [M – ＊＊]**
Unknown : [01] or [41]
Open state : [04]
Close state : [08]
During opening : [12]
During closing : [22]

⑧ **Slider position [S – ＊＊＊＊]**
In Side Switch ON : [01]
In Side Switch OFF : [00]

⑨ **Output video system [V – ＊＊＊＊]**
NTSC system : [NTSC]
PAL system : [PAL]
Automatic setting : [AUTO]
Scart terminal output [SK – ＊＊]
(Display only the WY model which can do the output setting of scart terminal.)
VIDEO : [00]
S-VIDEO : [01]
RGB : [02]

⑩ **Disc sensing [DSC – ＊＊＊]**
The type of discs loaded is displayed.
[DVD], [CD], [VCD], [ ]

⑪ **Jitter value [J – ＊＊＊＊]** Note:Don't use it.

⑫ **Version of the FL controller [FL: ＊＊＊＊]**

⑬ **Region setting of the player [REG: ＊]**
Setting value : [1] to [6]

⑭ **Destination setting of the FL controller [MDL: ＊＊＊＊ / ＊＊＊]**
Four characters in the front represent code 01.
Three characters in the back represent the destination code.
J: /J, K: /KU, /KC, /KU/KC, R: /RL/RD, RAM : /RAM, LB: /LB, WY: /WY

⑮ **Version of the flash ROM [VERSION: ＊＊＊＊＊＊＊＊]**

6.4 FUNCTIONAL SPECIFICATION OF THE SHORTCUT KEY

Only during normal playback, the following shortcut keys can be assigned by pressing a required key after pressing the ESC key of the remote control unit. To quit, press the ESC key

Command Contents	Conditions	Remote Control Key Name	Remote Control Code
Memory clear and region / revision indication		CLEAR (∗1)	A8-45
Average value measurement of DVD error rate		5 (∗1)	A8-05
CD error rate measurement		5 (∗1)	A8-05
Scart terminal output : VIDEO	WY, models equipped with Scart terminal	AUDIO	AF-BE
Scart terminal output : S-VIDEO		SUBTITLE	AF-36
Scart terminal output : RGB		ANGLE	AF-B5
Progressive OFF	Only for progressive models	R_SKIP	A3-9D
Progressive ON		F_SKIP	A3-9C
ZOOM ON (X2 -> X4 -> x1)		ZOOM	AF-37
Service mode indication (error rate indication, etc.)		CHP/TIM (∗1)	A8-13
Model information indication		CHAP (∗1)	A8-40
Title search Input mode IN Title No. input Search execution		SIDE A (∗1) Numbers (∗1) PLAY (∗1)	A8-4D A8-00 to A8-09 A8-17
Region confimation mode		A.MON (∗1) Numbers (∗1)	A8-1E A8-01 to A8-08

∗1 : Service mode remote control unit

• Service mode indication (ESC + CHP/TIM keys)
ID Address
The error rate is always displayed in exponential notation, e.g., ∗.∗ ∗ e - ∗, for both DVDs and CDs.
EDC/ID/AV 1 error history (ID Address, EDC/ID Error, last eight errors)

• Calculation of the average error rate (ESC + "5" [Service mode remote control unit] keys)
The average of the last eight error rates is calculated and indicated in exponential notation. After the calculation is completed, "OK" or "NG" is displayed. If "NG" is displayed, the disc tray will open (for both DVDs and CDs)
For DVDs: OK with 5.0e-4 or less, for CDs: OK with 7.6e-3 or less

• Indication of model information (ESC + CHAP keys)
The items from 12 to 15 of the SERVICE MODE Indications are displayed. However, in the indications, S in the standard test mode is changed to CHIP VERSION, and M is changed to FL VERSION.

• Region confirmation mode (ESC + A.MON [Service mode remote control unit] + "1"-"8" [Service mode remote control unit] keys)
After you press the A.MON key while holding the ESC key pressed and then input the region number, if the number is different from that set in the unit, an error message is displayed, and the tray opens.

6.5 FUNCTIONAL SPECIFICATION OF THE SERVICE MODE

• Display during Service Mode

To enter Service Mode, press the CHP/TIM key while holding the ESC key pressed.
To quit, press the ESC key.

Service mode display

① ID Address
② Error rate (always displayed), in exponential notation

ERROR RATE : ＊＊＊＊＊＊＊
(＊＊＊＊)
↑ Number of error

• Calculation of the average error rate
For DVDs: OK with 5.0e-4 or less, for CDs: OK with 7.6e-3 or less

ex) For DVDs

• Step 1		• Step 2	
△△e -□		△△e -4	
△△e -6	: OK	3.0e -4	: OK
△△e -5	: OK	4.0e -4	: OK
△△e -4	: Refer to Step 2	5.0e -4	: OK
△△e -3	: NG	6.0e -4	: NG
△△e -2	: NG	7.0e -4	: NG

③ EDC/ID error history (ID Address, EDC/ID errors, last eight errors)

Note:
＊ Error of AV1 is not supported in this player.

Indication plan contents

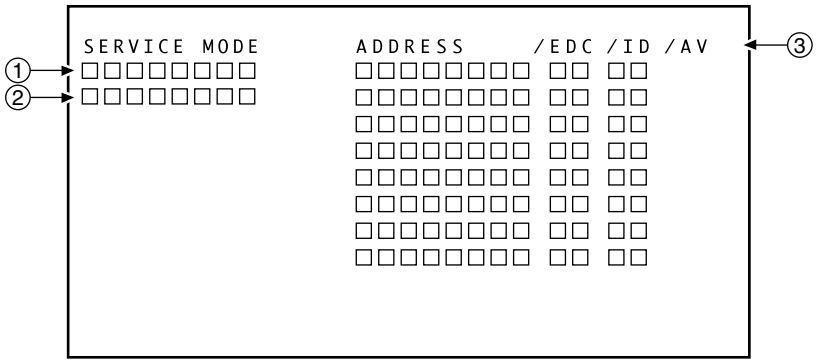

Character in bold : Item name
□: Information display

7. DISASSEMBLY

7.1 EXTERIOR SECTION

1. REMOVAL OF MECHANICAL PARTS AND P.C. BOARDS

1-1: TOP CABINET/FRONT CABINET/OPERATION PCB (Refer to Fig. 1-1)

1. Remove the 5 screws ①.
2. Remove the Top Cabinet in the direction of arrow (A).
3. Disconnect the following connector: **(CP1012)**.
4. Unlock the 4 supports ②.
5. Remove the Front Cabinet in the direction of arrow (B).
6. Remove the 12 screws ③.
7. Remove the Operation PCB in the direction of arrow (C).

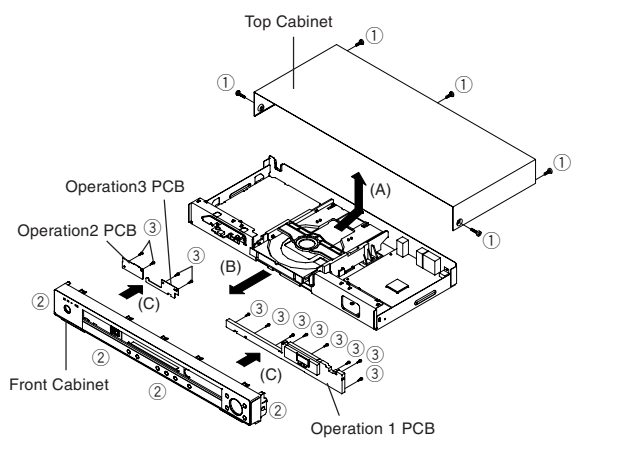

Fig. 1-1

1-2: USB PCB (Refer to Fig. 1-2)

1. Disconnect the following connectors: **(CP6601 and CP6602)**.
2. Remove the 2 screws ①.
3. Remove the USB PCB in the direction of arrow.

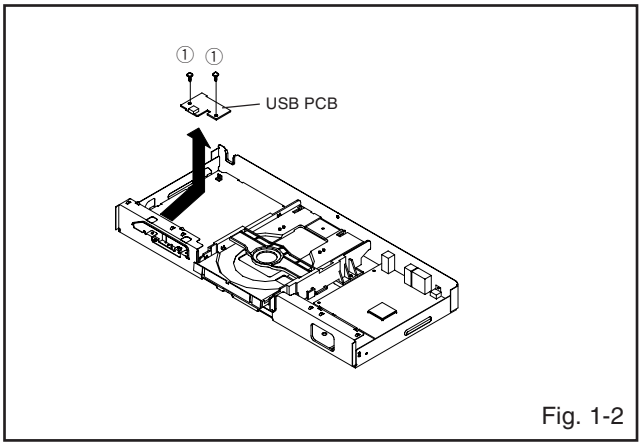

Fig. 1-2

1-3: POWER PCB (Refer to Fig. 1-3)

1. Disconnect the following connectors: **(CP502)**.
2. Remove the 4 screws ①.
3. Remove the Power PCB in the direction of arrow.

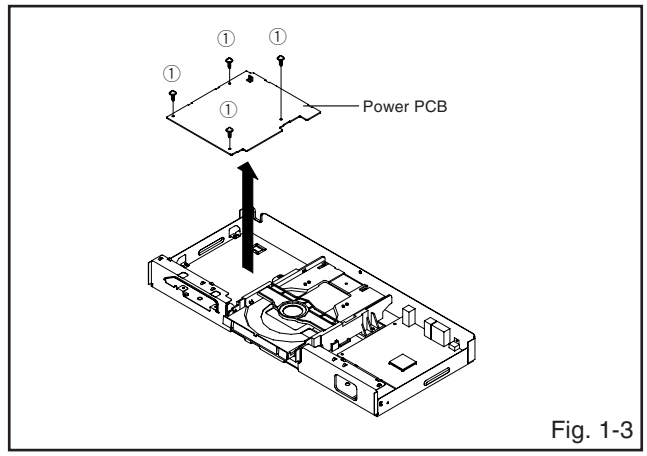

Fig. 1-3

1-4: DVD DECK (Refer to Fig. 1-4)

1. Short circuit the position shown in **Fig. 1-4** using a soldering iron. If you remove the DVD Deck with no soldering, the Laser may be damaged.
2. Disconnect the following connectors: **(CP2301, CP2302 and CP2303)**.
3. Remove the 4 screws ①.
4. Remove the DVD Deck in the direction of arrow.

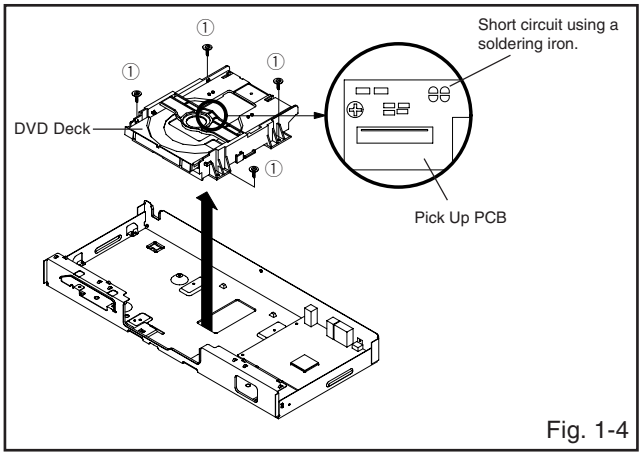

Fig. 1-4

NOTE

1. Before your operation, please read “PREPARATION OF SERVICING”.
2. Use the Lead Free solder.
3. Manual soldering conditions.
   - Soldering temperature: 320 ± 20°C
   - Soldering time: Within 3 seconds
   - Soldering combination: Sn-3.0Ag-0.5Cu
4. When Soldering/Removing of solder, use the drawing equipment over the Pick Up Unit to keep the Flux smoke away from it.
5. When installing the DVD Deck, remove all the soldering on the short circuit position after the connection of Pick Up PCB and DVD MT PCB connector.

1-5: DVD MT PCB (Refer to Fig. 1-5)

1. Remove the 4 screws ①.
2. Remove the 4 screws ②.
3. Remove the DVD MT PCB in the direction of arrow.

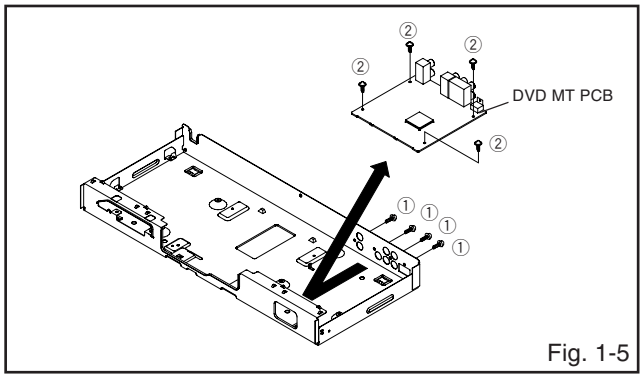

Fig. 1-5

7.2 DVD DECK SECTION

2. REMOVAL OF DVD DECK PARTS

NOTE

1. Disassemble only the DVD DECK PARTS parts listed here. Minute adjustments are needed if the disassembly is done. If the repair is needed except listed parts, replace the DVD MECHA ASS'Y.

2-1: TRAY (Refer to Fig. 2-1-A)

1. Set the Tray opened. **(Refer to the DISC REMOVAL METHOD AT NO POWER SUPPLY)**
2. Unlock the 2 supports ① and draw it while sagging the Tray.

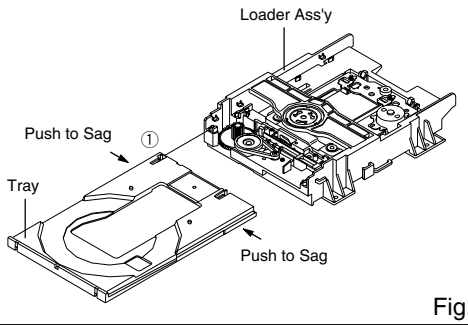

Fig. 2-1-A

NOTE

1. In case of the Tray installation, install them as the circled section of Fig. 2-1-B so that the each markers are met.

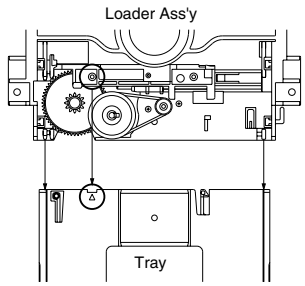

Fig. 2-1-B

2-2: TRAVERSE ASS'Y (Refer to Fig. 2-2-A)

1. Remove the screw ①.
2. Unlock the 2 supports ②.
3. Remove the Insulator (R) from the Loader Sub Ass'y.
4. Remove the Traverse Ass'y.

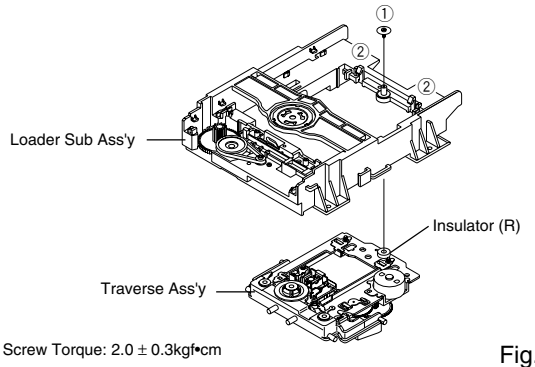

• Screw Torque: 2.0 ± 0.3kgf•cm

Fig. 2-2-A

NOTE

1. In case of the Traverse Ass'y, install it from (1) to (4) in order. **(Refer to Fig. 2-2-B)**
2. In case of the Traverse Ass'y installation, hook the wire on the Loader Ass'y as shown Fig. 2-2-C.

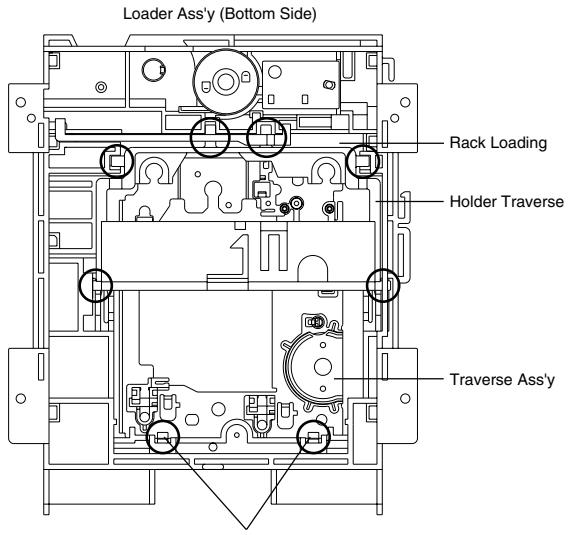

Fig. 2-2-B

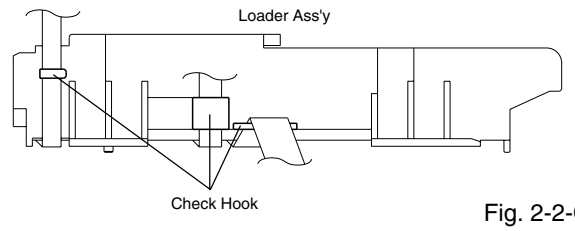

Fig. 2-2-C

2-3: LOADING MOTOR PCB ASS'Y/ LOADING BELT (Refer to Fig. 2-3-A)

1. Remove the Loading Belt.
2. Remove the screw ①.
3. Remove the Loading Motor PCB Ass'y.
4. Remove the 2 screws ②.
5. Remove the Loading Motor.
6. Remove the Gear Pulley.

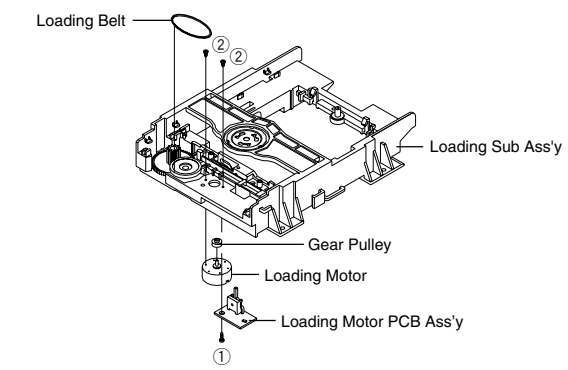

• Screw Torque: 2.5 ± 0.3kgf•cm (Screw ①)
• Screw Torque: 1.0 ± 0.3kgf•cm (Screw ②)

Fig. 2-3-A

NOTE

1. In case of the Pulley Motor installation, check if the value of the Fig. 2-3-B is correct.
2. When installing the wire of the Loading Motor PCB Ass'y, install it correctly as Fig. 2-3-C.
   Manual soldering conditions
   - Soldering temperature: 320 ± 20˚C
   - Soldering time: Within 3 seconds
   - Soldering combination: Sn-3.0Ag-0.5Cu
3. When installing the Loading Motor PCB Ass'y, install it correctly as Fig. 2-3-D.
4. In case of the Loading Motor PCB Ass'y installation, hook the wire on the Loader Sub Ass'y as shown Fig. 2-3-E.

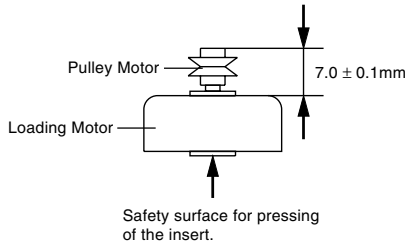

Fig. 2-3-B

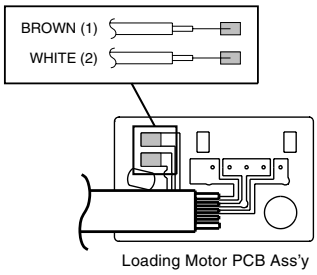

Fig. 2-3-C

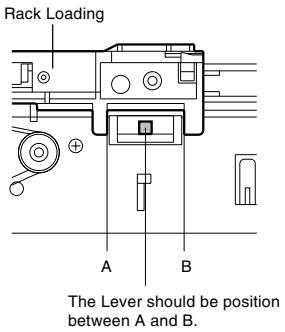

Fig. 2-3-D

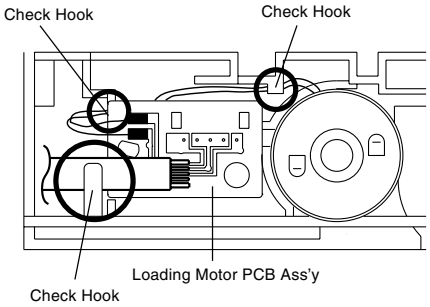

Fig. 2-3-E

2-4: RACK LOADING/MAIN GEAR/PULLEY GEAR (Refer to Fig. 2-4-A)

1. Unlock the support ② and remove the Gear Pulley.
2. Remove the Gear Main.
3. Press down the catcher ① and slide the Rack Loading.

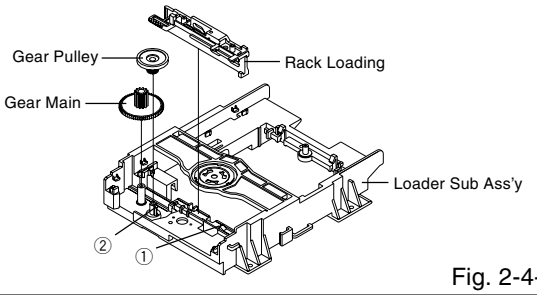

Fig. 2-4-A

NOTE

1. In case of the Rack Loading installation, hook the Rack Loading on the Loader Sub Ass'y as shown Fig. 2-4-B.
2. When installing the Gear Main, take care the direction of up or down as shown Fig. 2-4-C.

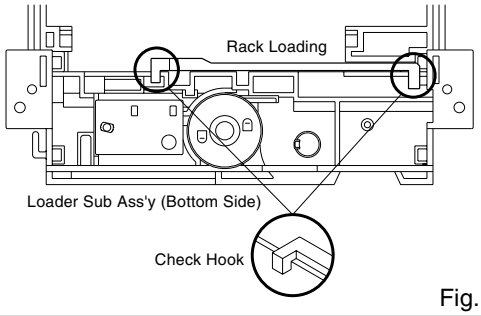

Fig. 2-4-B

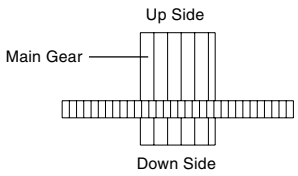

Fig. 2-4-C

2-5: CLAMPER ASS'Y (Refer to Fig. 2-5-A)

1. Press the Clamper and rotate the Plate Clamper clockwise, then unlock the 3 supports ①.
2. Remove the Plate Clamper, Magnet Clamper and Clamper.

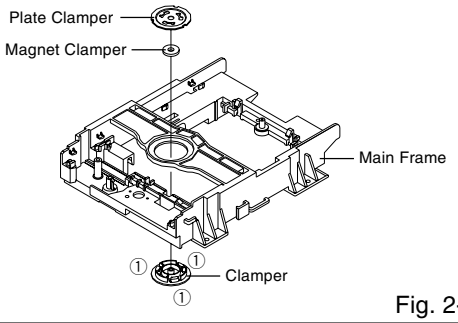

Fig. 2-5-A

NOTE

1. In case of the Clamper Ass'y installation, install correctly as Fig. 2-5-B.

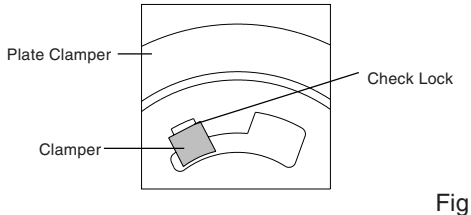

Fig. 2-5-B

2-6: HOLDER TRAVERSE/INSULATOR (F)/INSULATOR (R) (Refer to Fig. 2-6-A)

1. Remove the Holder Traverse.
2. Remove the 2 Insulator (F).
3. Remove the Insulator (R).

Pickup leneses
GEM1004
GED-008

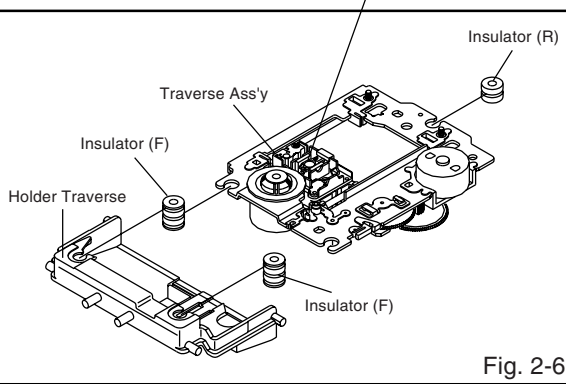

Fig. 2-6-A

NOTE

1. In case of the Insulator (F) installation, install correctly as Fig. 2-6-B.

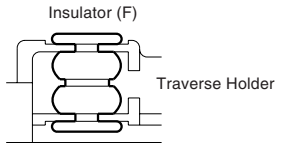

Fig. 2-6-B

2-7: SWITCH PCB ASS'Y/GEAR MIDDLE/GEAR FEED/ RACK FEED ASS'Y/FEED MOTOR (Refer to Fig. 2-7-A)

1. Unlock the support ①.
2. Remove the Gear Middle.
3. Remove the screw ②.
4. Remove the Rack Feed Ass'y.
5. Remove the screw ③.
6. Remove the Switch PCB Ass'y.
7. Remove the screw ④.
8. Remove the Gear Feed.
9. Remove the 2 screws ⑤.
10. Remove the Feed Motor.
11. Remove the Gear Motor.

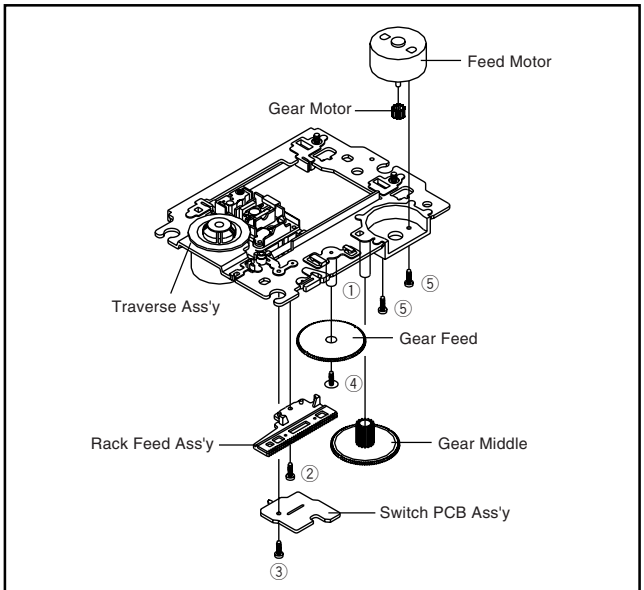

• Screw Torque: 1.3 ± 0.3kgf•cm (Screw ②)
• Screw Torque: 3.0 ± 0.3kgf•cm (Screw ③)
• Screw Torque: 1.0 ± 0.3kgf•cm (Screw ④, ⑤)

Fig. 2-7-A

NOTE

1. When installing the Rack Feed Ass'y, push both ends to align the teeth as shown Fig. 2-7-B. Then install it.
2. In case of the Gear Motor installation, check if the value of the Fig. 2-7-C is correct.
3. When installing the wire of the Switch PCB Ass'y, install it correctly as Fig. 2-7-D.
   Manual soldering conditions
   • Soldering temperature: 320 ± 20˚C
   • Soldering time: Within 3 seconds
   • Soldering combination: Sn-3.0Ag-0.5Cu
4. After the assembly of the Traverse Ass'y, hook the wire on the Traverse Ass'y as shown Fig. 2-7-E.

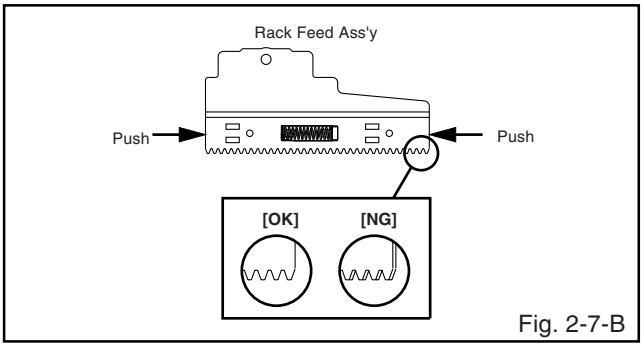

Fig. 2-7-B

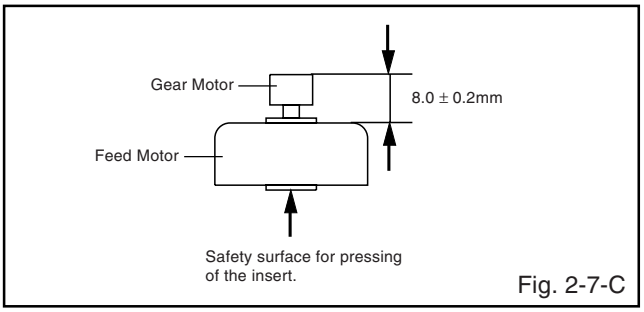

Fig. 2-7-C

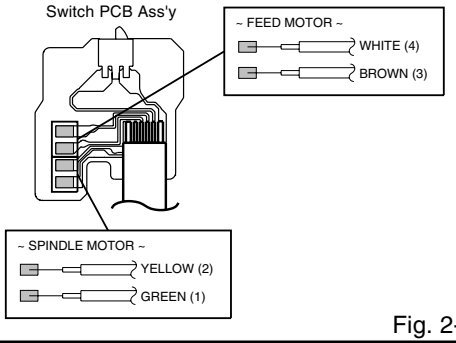

Fig. 2-7-D

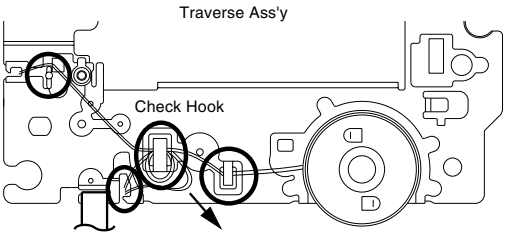

• Loosen the wire in the direcion of the arrow.

Fig. 2-7-E

2-8: FFC WIRE HANDLING

1. When installing the FFC, fold it correctly and install it as shown from Fig. 2-8.

NOTE

1. Do not make the folding lines except the specified positions for the FFC.

[24 pin FFC]

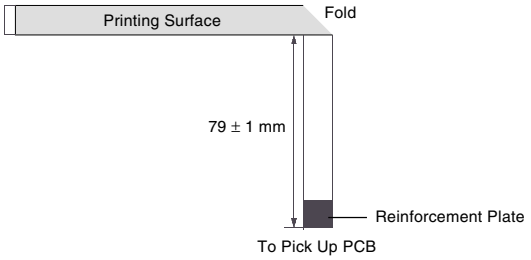

Fig. 2-8

8. EACH SETTING AND ADJUSTMENT

8.1 ADJUSTMENT

There is no information to be shown in this chapter.

8.2 RE-WRITE FOR DVD FIRMWARE

1. Purpose

After replacing the DVD MT PCB Assy, be sure to update the firmware to the latest version. The firmware of the Assy for service may not be the latest.

2. Procedures for creating the disc for updating

Necessary tools:

① PC with a CD-R/CD-RW drive
② Blank CD-R or CD-RW
③ Firmware file (*****.BIN)

How to create:

① Start up the program for writing to CD.
② Load a blank disc in the CD-R/CD-RW drive.
③ Enter "PIONEER" as the volume label.
④ Select the .BIN file.
⑤ Write the latest version of the firmware in ISO 9660 format.

3. Procedures for updating the firmware

How to update:

① Turn on the main unit and open the disc tray.
② Place the disc for updating in the disc tray and close the tray.
③ Press the PLAY button.

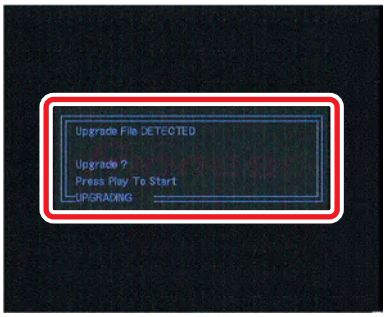

While the screen shown at left is being displayed, updating is in progress.
DO NOT TURN OFF THE POWER DURING UPDATING.

④ Updating of the firmware is completed.

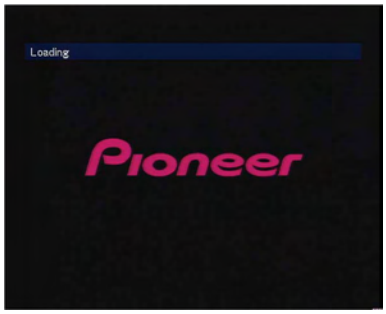

When the screen with the Pioneer logo is displayed, updating is completed.
The time required for updating is about 2 minutes.

4. How to confirm the version of the firmware

Press the ESC then the CHAP key on the remote control unit for servicing. The version of the firmware is labeled ROM NUMBER. Check if the version is the latest one.

	AREA:WY	REGION:2
ROM NUMBER	YGA6B23A	
REG CHK	40	
SUM CHK	02A5	
FL VERSION	1.16	
CHIP VERSION	1389FE	

How to interpret the version code:

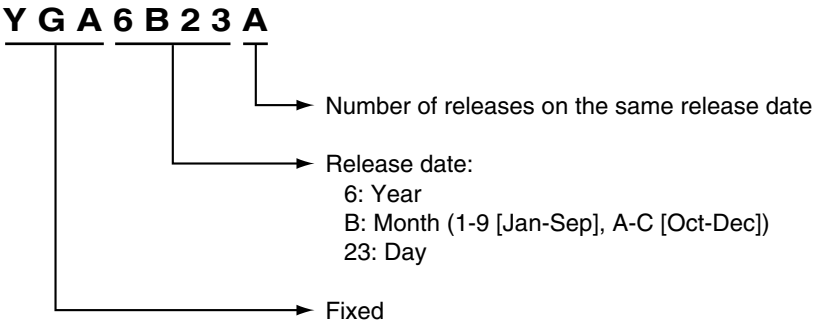

5. Troubleshooting

① If updating of the firmware failed
If the main unit was turned off during updating, it cannot initialize and start up again properly. In such a case, replace the flash ROM on the DVD MT PCB Assy.

② If updating of the firmware using the disc for updating failed
- Was the disc for updating recognized properly?
  Check if the volume label of the disc is PIONEER.
- Is playback of a disc other than the disc for updating possible?
  If playback of a test CD is also impossible, a reading section, such as PU, may be defective. In such a case, repair the defective part first.
  If playback of a test CD is possible, the disc for updating may be defective. Check for any scratches or foreign matter, such as fingerprints, on the reading surface.
  If no problem is found with the disc, create a new disc for updating again.

A

B

C

D

E

F

9. EXPLODED VIEWS AND PARTS LIST

NOTES:
- *Parts marked by "NSP" are generally unavailable because they are not in our Master Spare Parts List.*
- *The ⚠ mark found on some component parts indicates the importance of the safety factor of the part. Therefore, when replacing, be sure to use parts of identical designation.*
- *Screws adjacent to ▼ mark on product are used for disassembly.*
- *For the applying amount of lubricants or glue, follow the instructions in this manual. (In the case of no amount instructions, apply as you think it appropriate.)*

9.1 PACKING SECTION

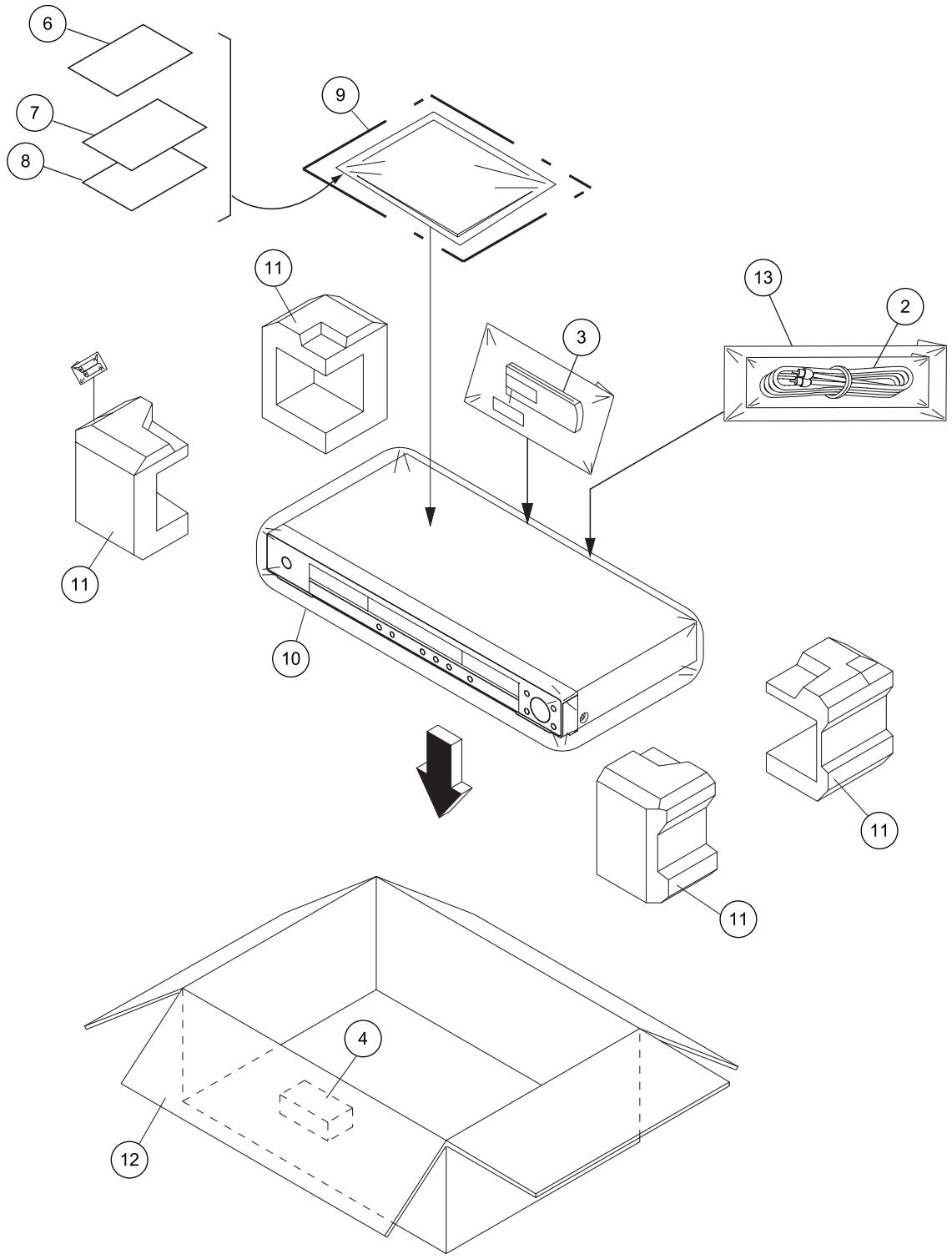

PACKING SECTION parts List

Mark	No.	Description	Part No.
	1	••••••	
	2	Audio/Video Cable	06CPBA2006
	3	Remote Control	07650NU010
	4	Package Pad	792WHAA237
	5	••••••	
NSP	6	Guarranty	J2G00202B
	7	Operating Instructions (English)	J2K40401A
	8	Operating Instructions (French)	J2K40410A
	9	Polyethylene Bag,Instruction	JB5KD300
	10	Gift Sheet	791WHAA183
	11	Package	792WHAA227
	12	Gift Box	See Contrast table (2)
	13	Polyethylene Bag,INSTA5	791WHAA040
	14	Security Tag	See Contrast table (2)

(2) CONTRAST TABLE

DV-400V-S/KUCXZT and DV-400V-K/KUCXZT are constructed the same except for the following :

Mark	No.	Symbol and Description	DV-400V-S/KUCXZT	DV-400V-K/KUCXZT
	12	Gift Box	793WCDD426	793WCDD491
NSP	14	Security Tag	7230007398	Not used

9.2 EXTERIOR SECTION

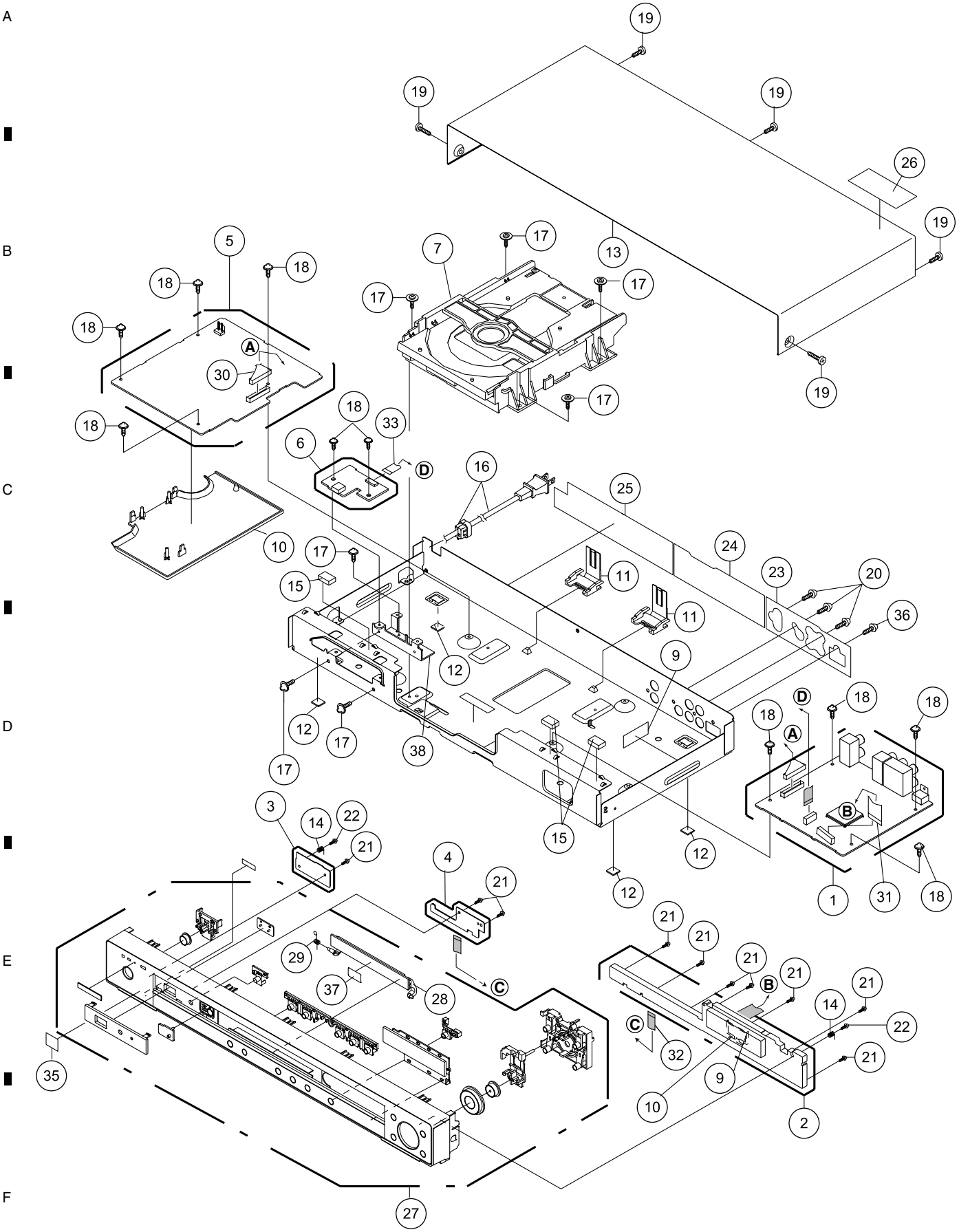

EXTERIOR SECTION parts List

Mark	No.	Description	Part No.
	1	DVD MT PCB Assy	A2K404A130
	2	OPERATION 1 PCB Assy	A2K404A270
	3	OPERATION 2 PCB Assy	A2K401A280
	4	OPERATION 3 PCB Assy	A2K401ADF0
⚠	5	POWER PCB Assy	A2K404A240
	6	USB PCB ASSY	A2K401ADD0
	7	DVD MECHA ASSY	A2K001A650
NSP	8	Plate,Bottom	702WSAA195
NSP	9	Sheet,Caution	726000A140
	10	Plate,Cover power	755WPAA031
	11	Holder,FFC	761WPA0396
	12	Cushion,Leg	VEB1349
	13	Cabinet,Top	See Contrast table (2)
	14	Spring Earth	743WKAA015
	15	Cushion (15x20x16)	8965TS101B
⚠	16	Cord AC Bush	120Q618902
	17	Screw,Tap Tite(S)-Bind Wash.	816423063U
	18	Screw,Tap Tite(S) (3x5.5)	8107D3055U
	19	Screw,Tap Tite(B) (3x6.0)	See Contrast table (2)
	20	Screw,Tap Tite(B)Pan (3x6)	810913060U
	21	Screw,Tap Tite(P) (2.6x8)	811022680U
	22	Screw,Tap Tite(P) Bind WH7	8110I2680U
NSP	23	Sheet,Jack 1	722631A192
NSP	24	Sheet,Jack 2	See Contrast table (2)
NSP	25	Sheet,Jack 3	See Contrast table (2)
NSP	26	Sheet Caution	7250000597
	27	Front Cabi Assy	See Contrast table (2)
	28	Flap, DVD	712WPAA150
	29	Spring, Flap-DVD	743WKA0052
	30	Cord Connector (CD502)	06CU2E3301
	31	Cord Jumper (CD601)	122H0B1003
	32	Cord Jumper (CD604)	122H051204
	33	Cord Jumper (CD6601)	122H063401
	34	••••••	
NSP	35	Energy Star Label	7230007965
	36	Screw Pan	810213060U
	37	Sheet DVD	7235630011
NSP	38	Angle PCB	761WSAA076

(2) CONTRAST TABLE

DV-400V-S/KUCXZT and DV-400V-K/KUCXZT types are constructed the same except for the following :

Mark	No.	Symbol and Description	DV-400V-S/KUCXZT	DV-400V-K/KUCXZT
	13	Cabinet, Top	702WSB0114	702WSB0115
	19	Screw,Tap Tite(B) (3x6.0)	8109K3060U	8109K3060S
NSP	24	Sheet, Jack 2	722631A247	722631A256
NSP	25	Sheet, Jack 3	722631A194	722631A157
	27	Front Cabi Assy	7A701A895A	7A701A935A

9.3 06 DVD MECHA SECTION

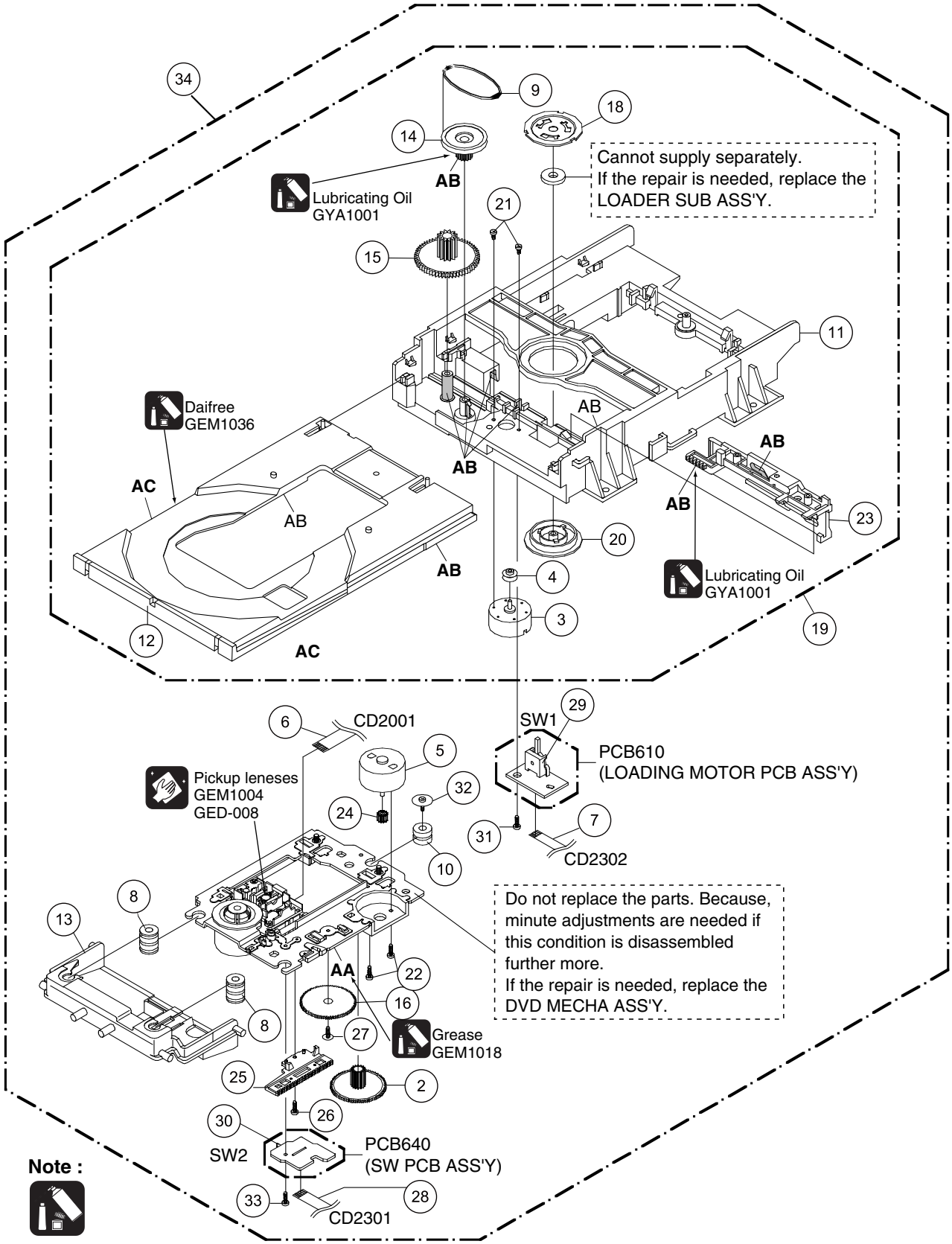

Note :

CLASS	PART NO.	MARK
GREASE	GEM1018	**AA**
	GYA1001	**AB**
	GEM1036	**AC**

NOTE: Applying positions AA, AB and AC for the grease are displayed for this section.
Check if the correct grease is applied for each position.

06 DVD MECHA SECTION parts List

Mark No.	Description	Part No.
1	••••••	
2	Gear,Middle	92P100117A
3	Loading Motor	1515S98004
4	Pulley,Motor	92P100097A
5	FEED Motor	1515S98004
6	Cord Jumper (24P)(CD2001)	122J4O2202
7	Cord Jumper (CD2302)	122H051602
8	Insulator (F)	92P200013A
9	Belt,Loading	92P200015A
10	Insulator (R)	92P200016A
11	Frame,main	92P100119A
12	Tray (R)	92P100151A
13	Holder ,Traverse	92P100125A
14	Gear,Pulley	92P100123A
15	Gear,Main	92P100124A
16	Gear,Feed	92P100116A
17	••••••	
18	Plate, Clamper	92P000023A
19	LOADER SUB ASSY (R)	92AAA0024A
20	Clamper	92P100122A
21	Screw,Pan (M1.7x3 P3)	814011730U
22	Screw,Pan (M1.7x2.3 P3)	814011723U
23	Rack,Loading	92P100121A
24	Gear,Motor	92P100088A
25	Feed Rack Assy	92AAA0017A
26	Screw,T-Tite(B) (M1.7x5.0 P3)	813381750U
27	Screw,Gear Feed	92P700007A
28	Cord Jumper (CD2301)	122H061605
29	Switch (SW1)	0515S32003
30	Push Switch (SW2)	0500101036
31	Screw,Tap Tite(P) (2.6x8)	811022680U
32	Sems.Tap Tite(P) (2x8)	816112080U
33	Screw (Bind 2x8)	811022080U
34	DVD MECHA ASSY	A2K001A650

10. SCHEMATIC DIAGRAM

10.1 DVD MT PCB ASSY (1/7)

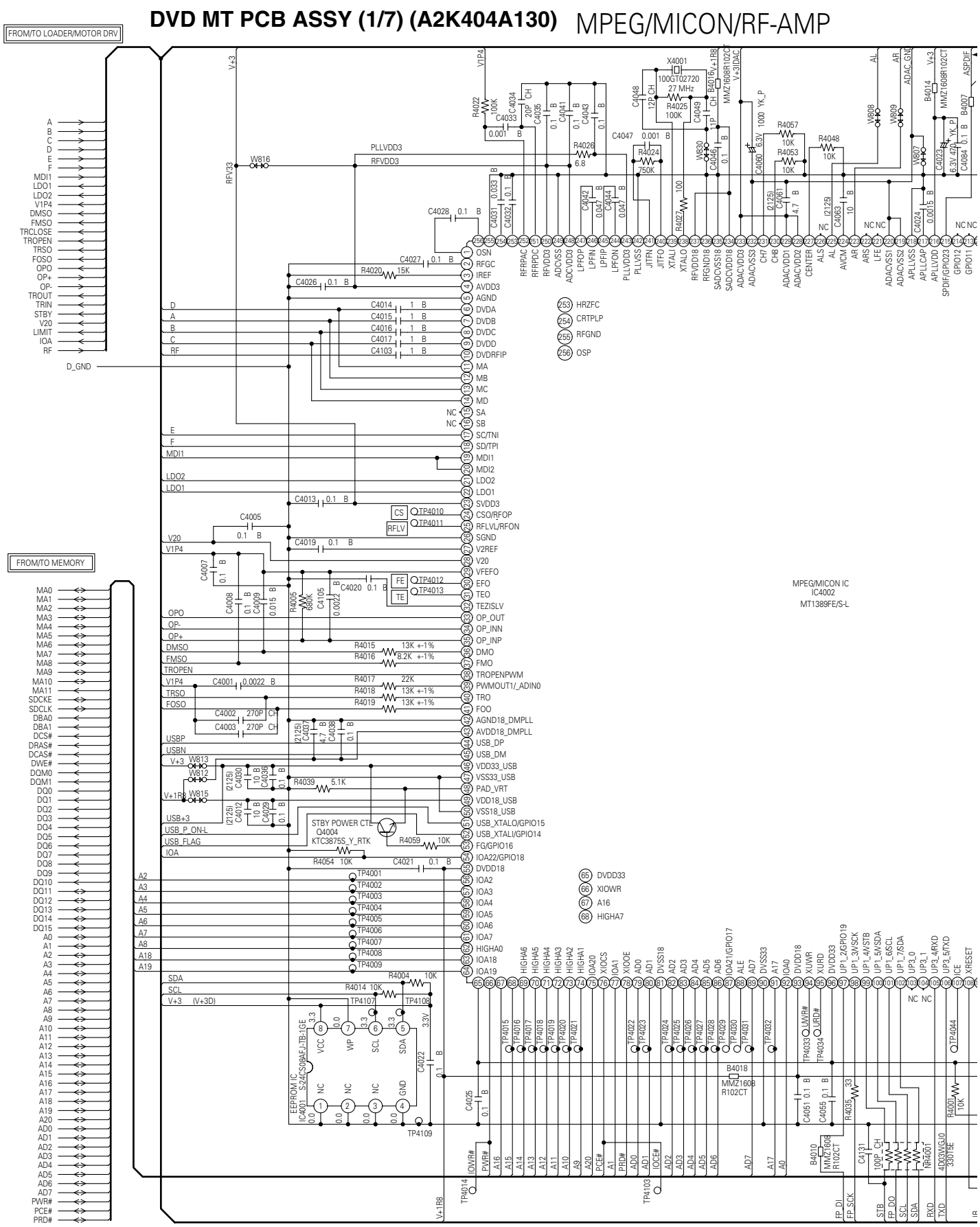

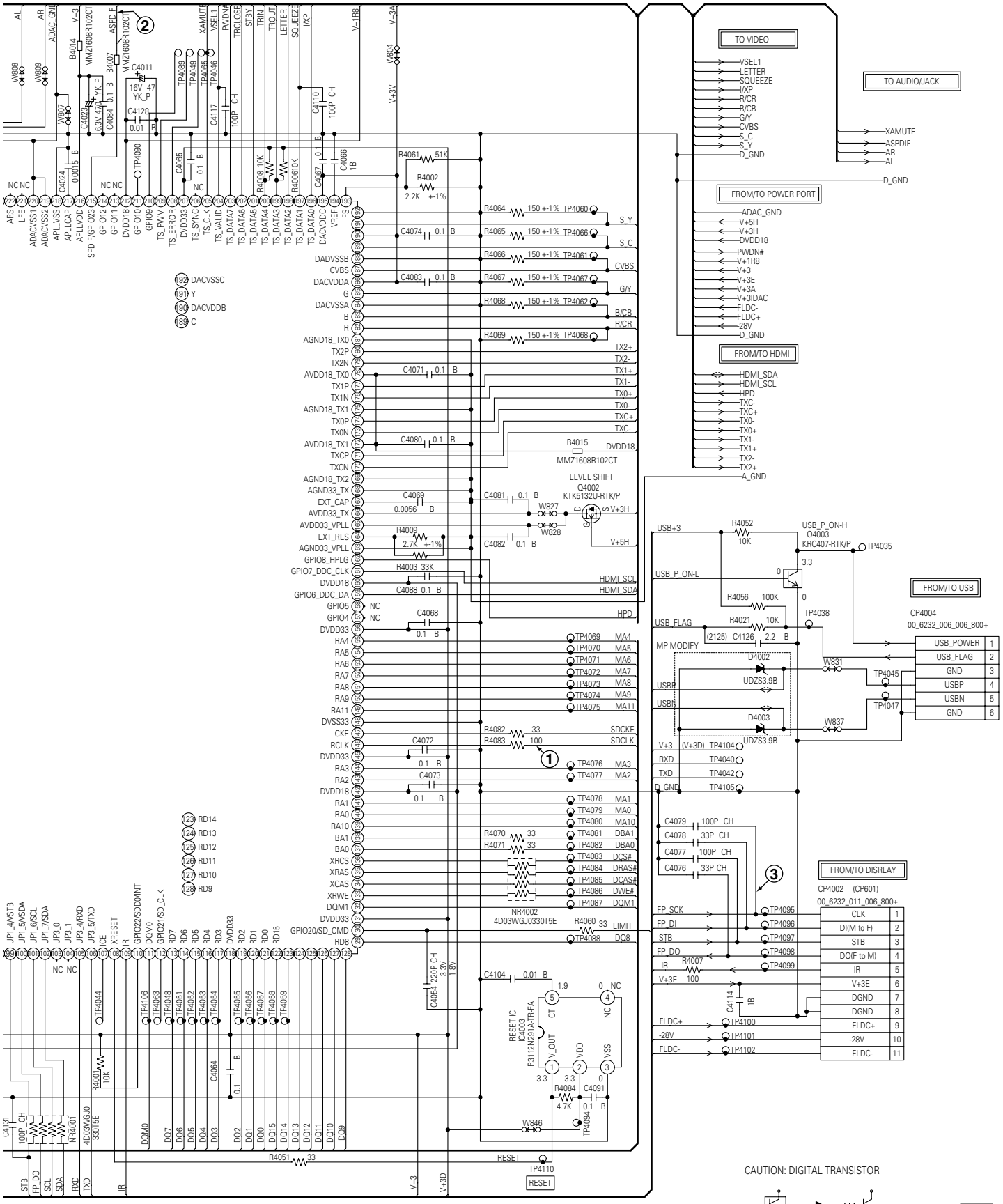

NOTE: THIS SCHEMATIC DIAGRAM IS THE LATEST AT THE TIME OF PRINTING AND SUBJECT TO CHANGE WITHOUT NOTICE 。

PCB130
DMF090

10.2 DVD MT PCB ASSY(2/7)

DVD MT PCB ASSY (2/7)
(A2K404A130)

MEMORY SCHEMA

(DVD MT PCB)

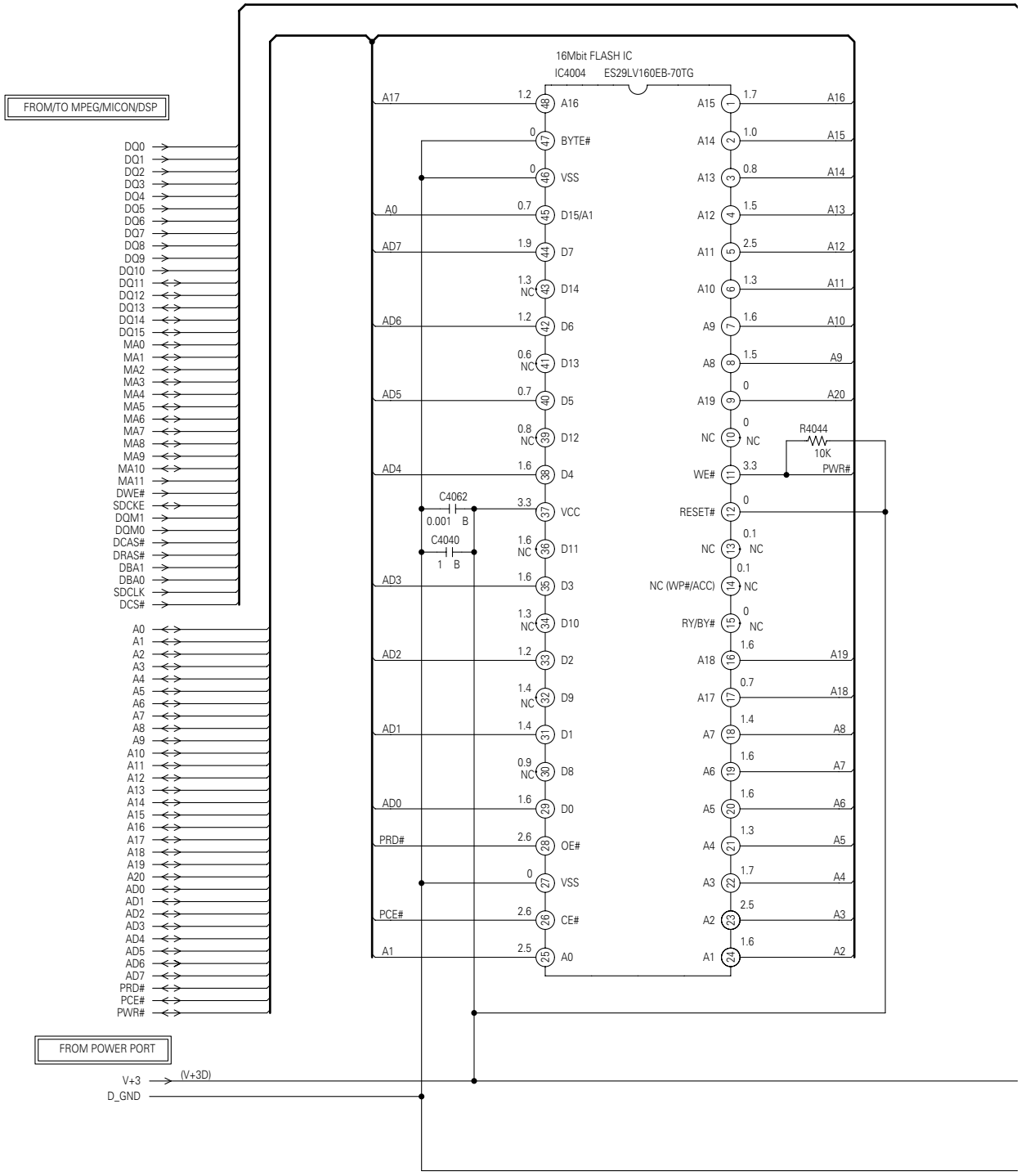

NOTE: THIS SCHEMATIC DIAGRAM IS THE LATEST AT THE TIME OF PRINTING AND SUBJECT TO CHANGE WITHOUT NOTICE 。

NOTE:THE D
MEAS
DURI

- When ordering service parts, be sure to refer to "EXPLODED VIEWS and PARTS LIST" or "PCB PARTS LIST".
- The ⚠ mark found on some component parts indicates the importance of the safety factor of the part. Therefore, when replacing, be sure to use parts of identical designation.
- : The power supply is shown with the marked box.

SCHEMATIC DIAGRAM

VD MT PCB)

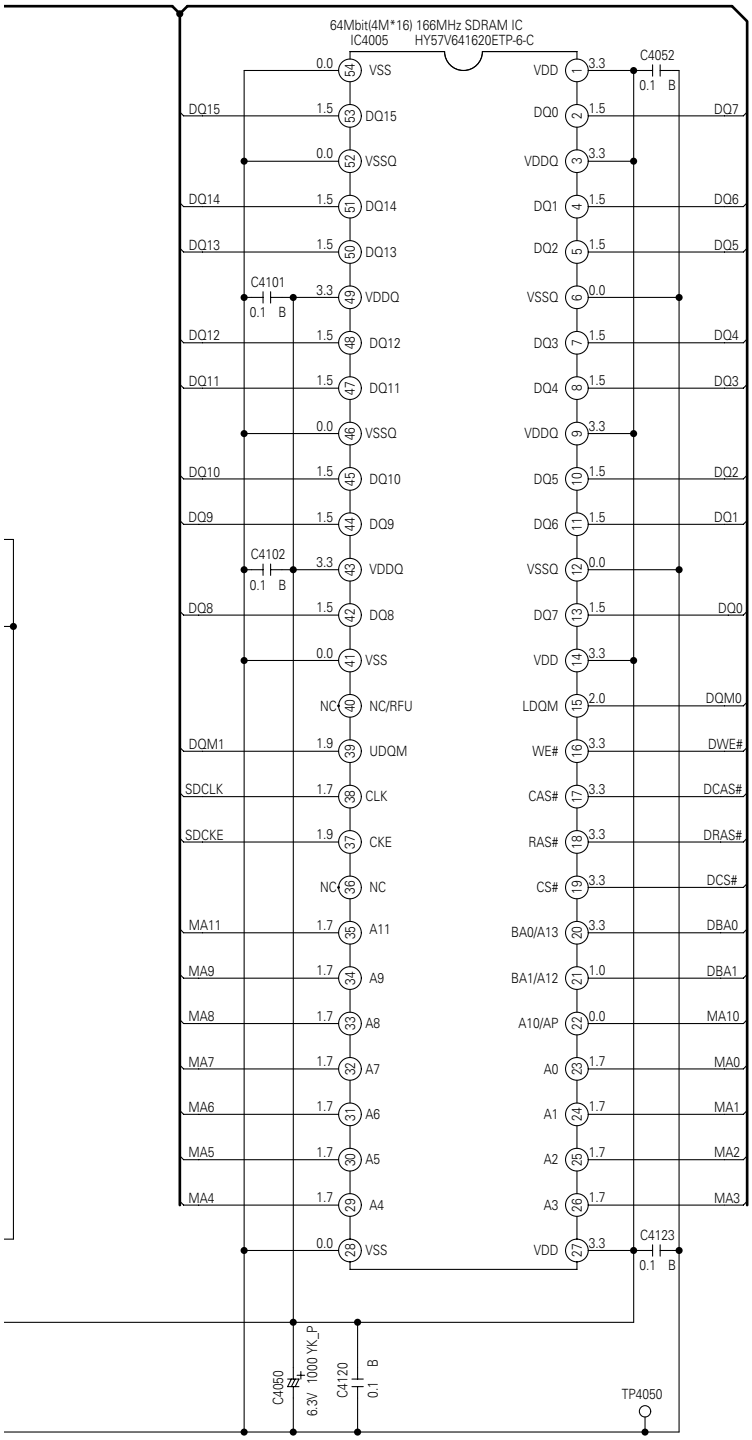

NOTE:THE DC VOLTAGE EACH PART WAS MEASURED WITH THE DIGITAL TESTER DURING PLAYBACK.

PCB130
DMF090

10.3 DVD MT PCB ASSY(3/7)

DVD MT PCB ASSY (3/7)
(A2K404A130)

LOADER/MOTOR DRV

(DVD M

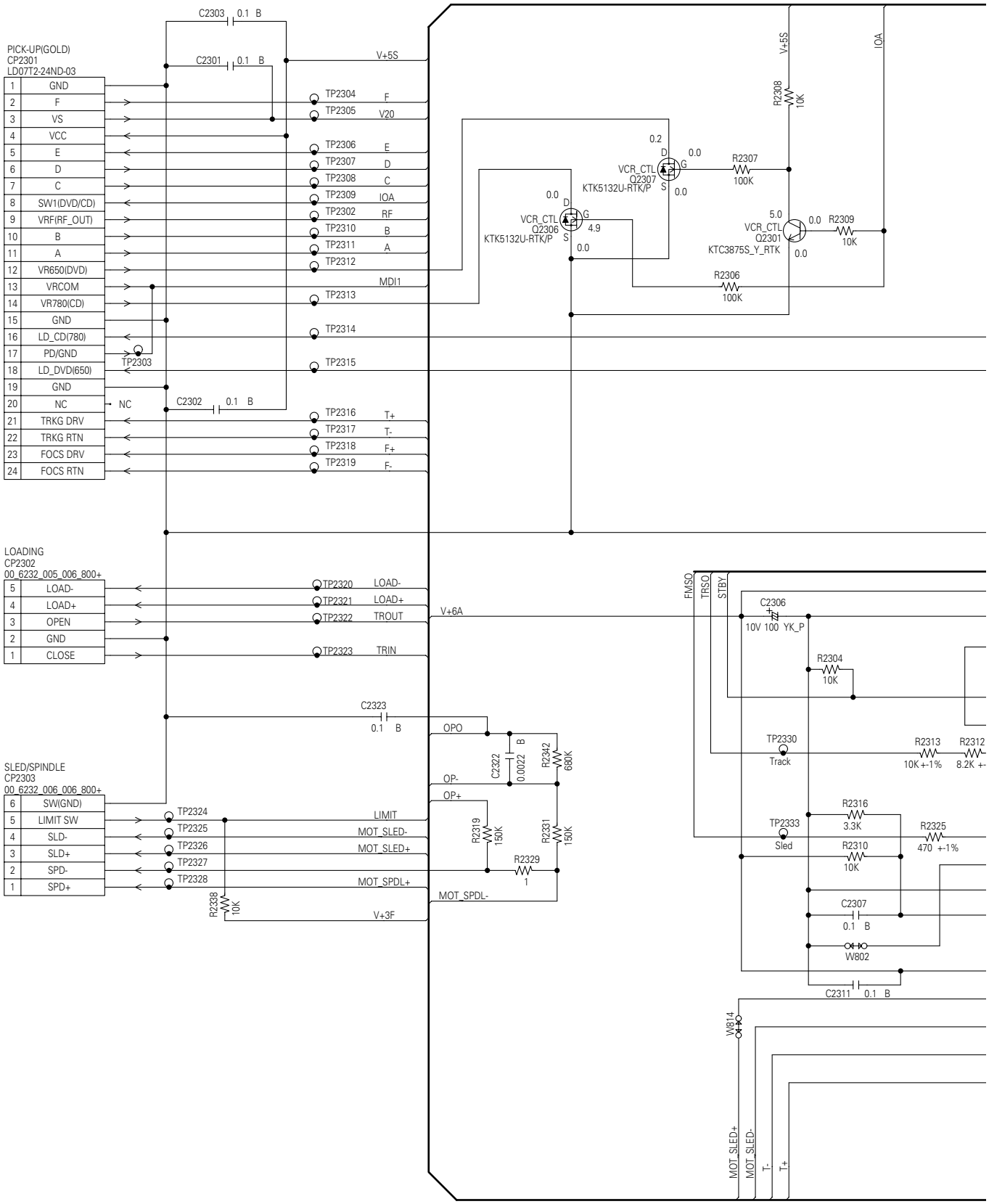

NOTE: THE DC VOLTAGE EACH PART WAS MEASURED WITH THE DIGITAL TESTER DURING PLAYBACK.

NOTE: THIS S
OF PRI

)TOR DRV SCHEMATIC DIAGRAM

(DVD MT PCB)

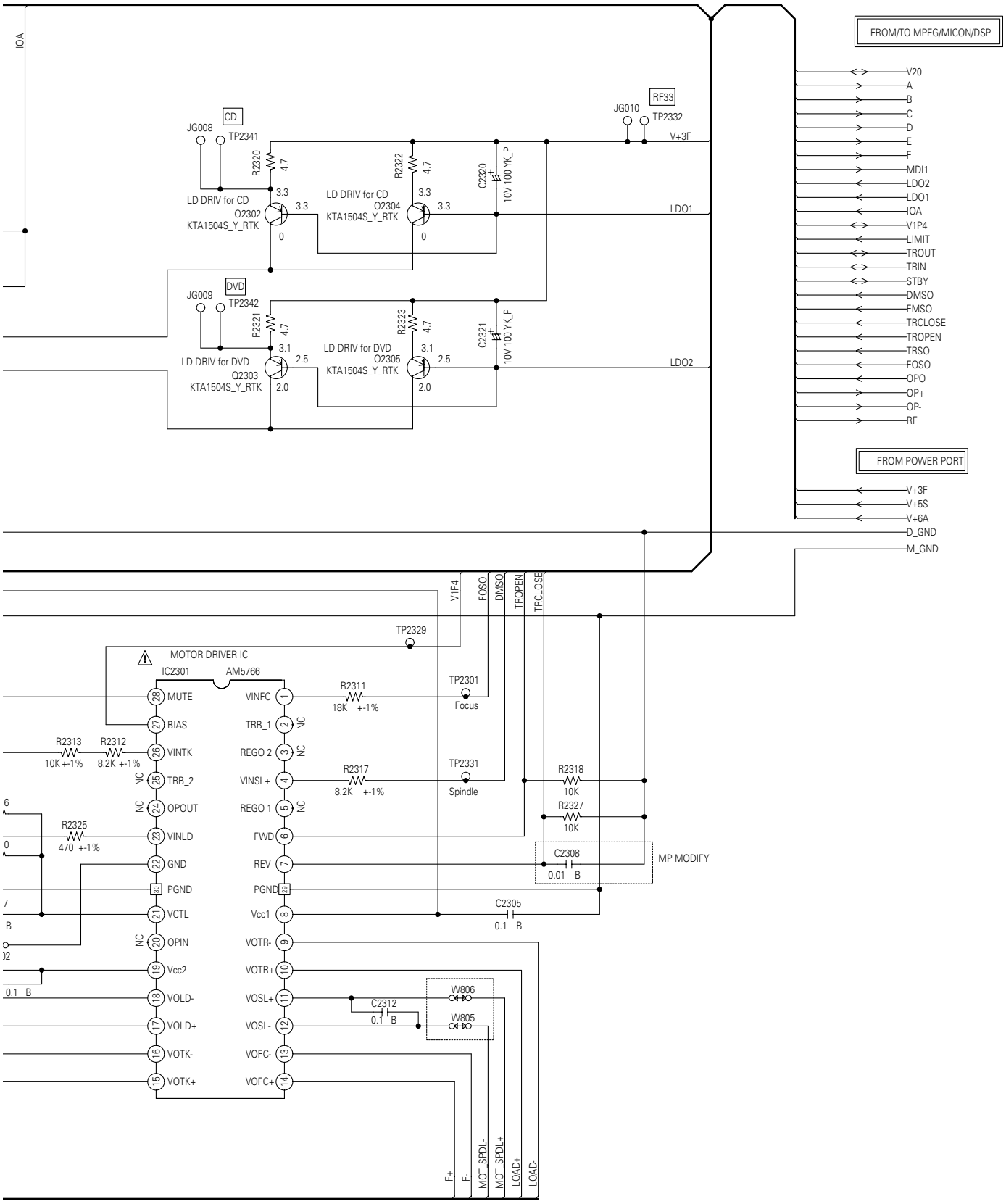

NOTE: THIS SCHEMATIC DIAGRAM IS THE LATEST AT THE TIME OF PRINTING AND SUBJECT TO CHANGE WITHOUT NOTICE 。

PCB130
DMF090

10.4 DVD MT PCB ASSY(4/7)

DVD MT PCB ASSY (4/7)
(A2K404A130)

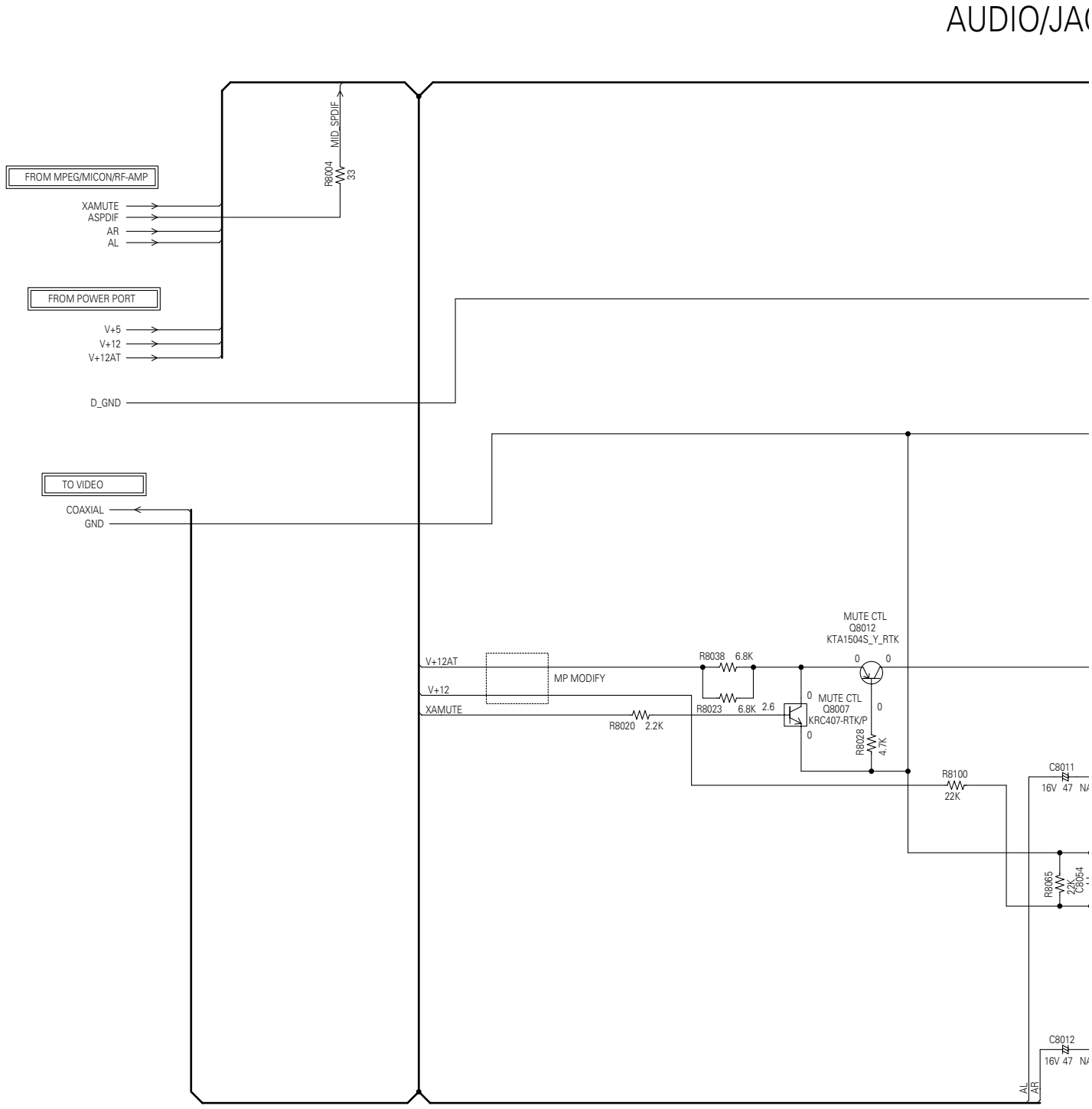

NOTE:THE DC VOLTAGE EACH PART WAS MEASURED WITH THE DIGITAL TESTER DURING PLAYBACK.

NOTE: THIS SCHE
OF PRINTI

AUDIO/JACK SCHEMATIC DIAGRAM

(DVD MT PCB)

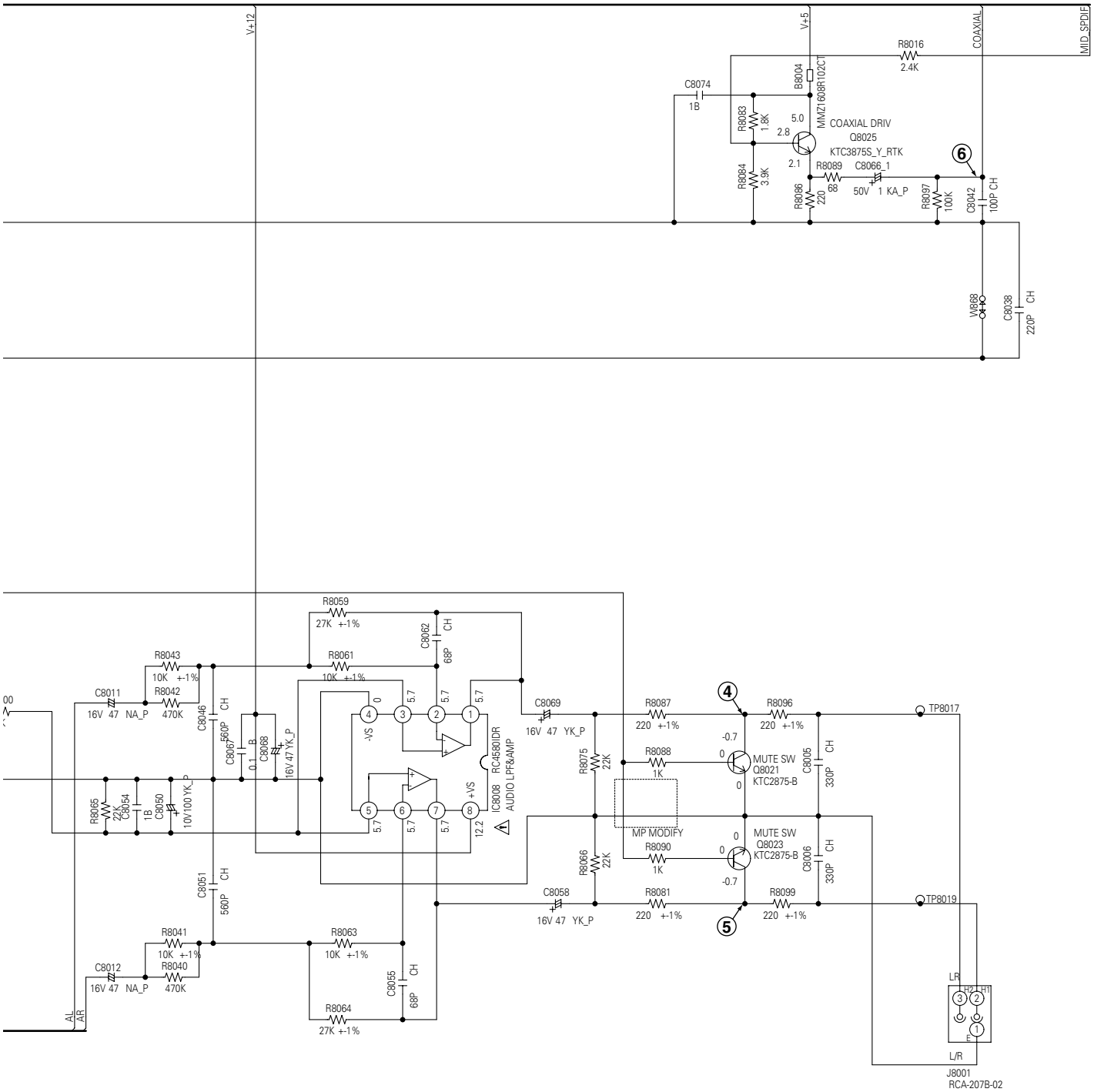

NOTE: THIS SCHEMATIC DIAGRAM IS THE LATEST AT THE TIME OF PRINTING AND SUBJECT TO CHANGE WITHOUT NOTICE 。

CAUTION: DIGITAL TRANSISTOR

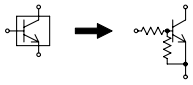

PCB130
DMF090

10.5 DVD MT PCB ASSY(5/7)

DVD MT PCB ASSY (5/7) (A2K404A130)

VIDEO SCHEMA
(DVD MT

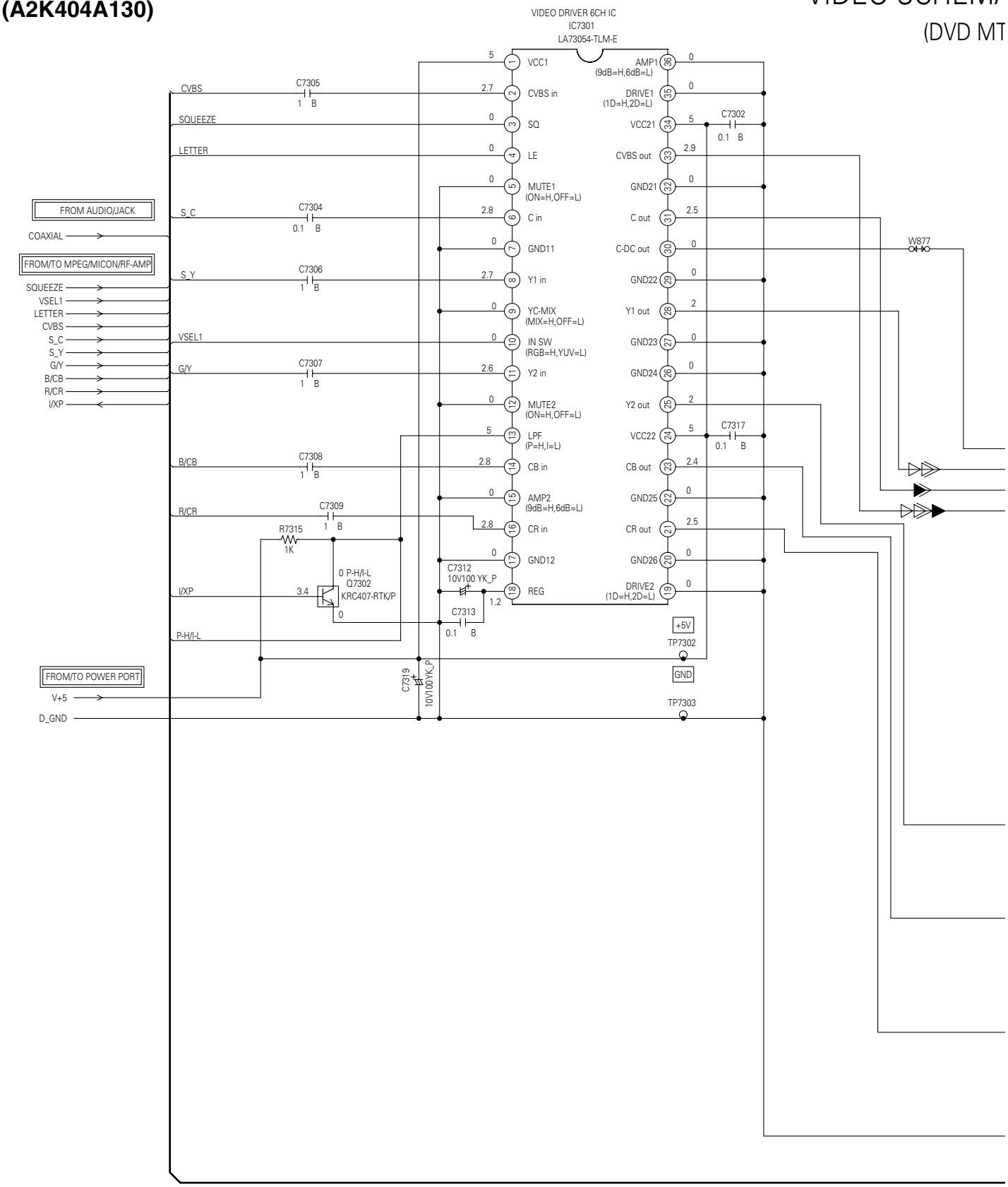

NOTE:THE DC VOLTAGE EACH PART WAS MEASURED WITH THE DIGITAL TESTER DURING PLAYBACK.

NOTE: THIS SCHEMATIC DIAGRAM OF PRINTING AND SUBJECT

) SCHEMATIC DIAGRAM

(DVD MT PCB)

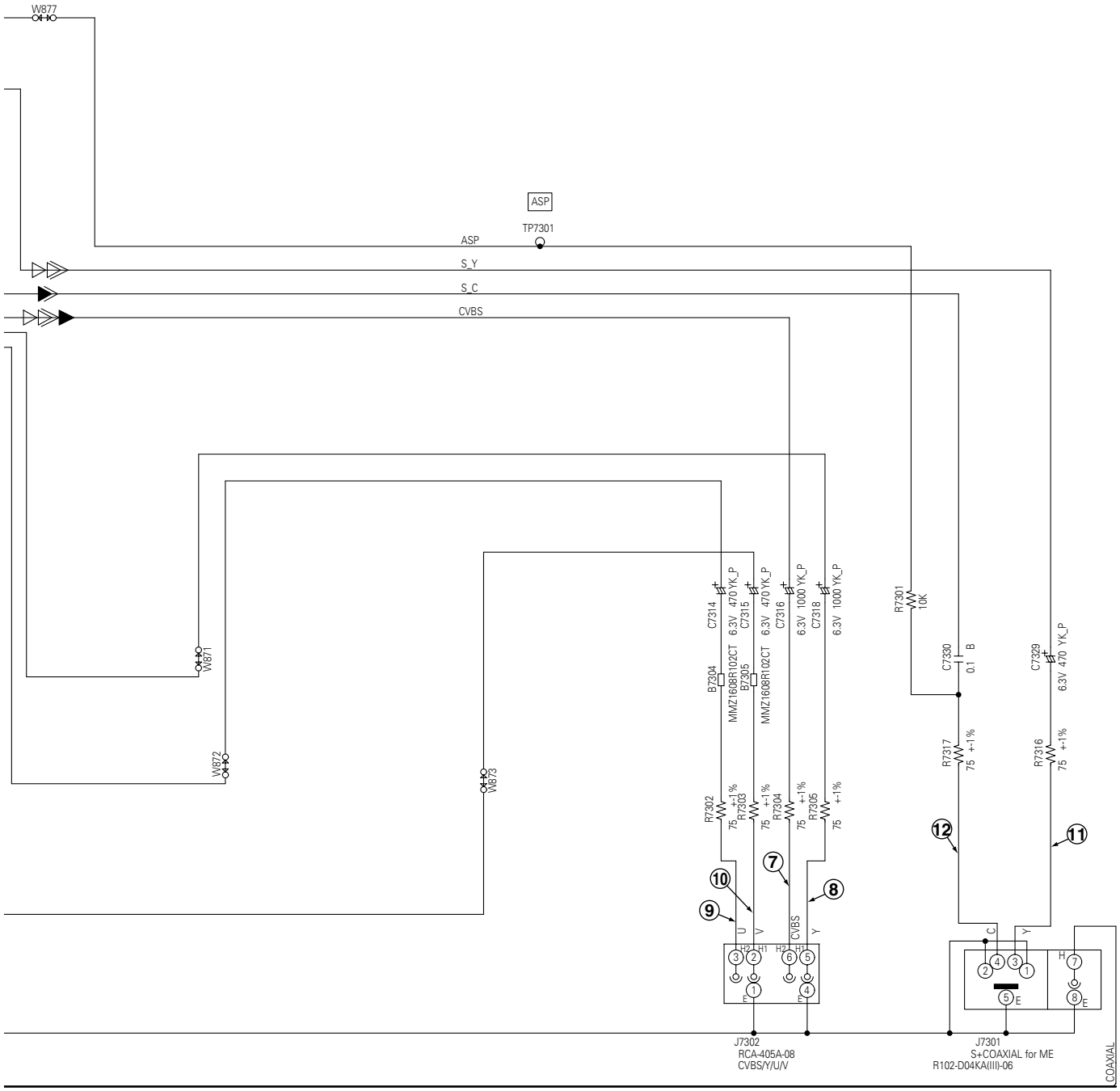

IS SCHEMATIC DIAGRAM IS THE LATEST AT THE TIME
PRINTING AND SUBJECT TO CHANGE WITHOUT NOTICE 。

CAUTION: DIGITAL TRANSISTOR

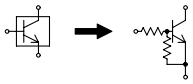

PCB130
DMF074

10.6 DVD MT PCB ASSY(6/7)

DVD MT PCB ASSY (6/7)
(A2K404A130)

HDMI SCHEMAT
(DVD MT

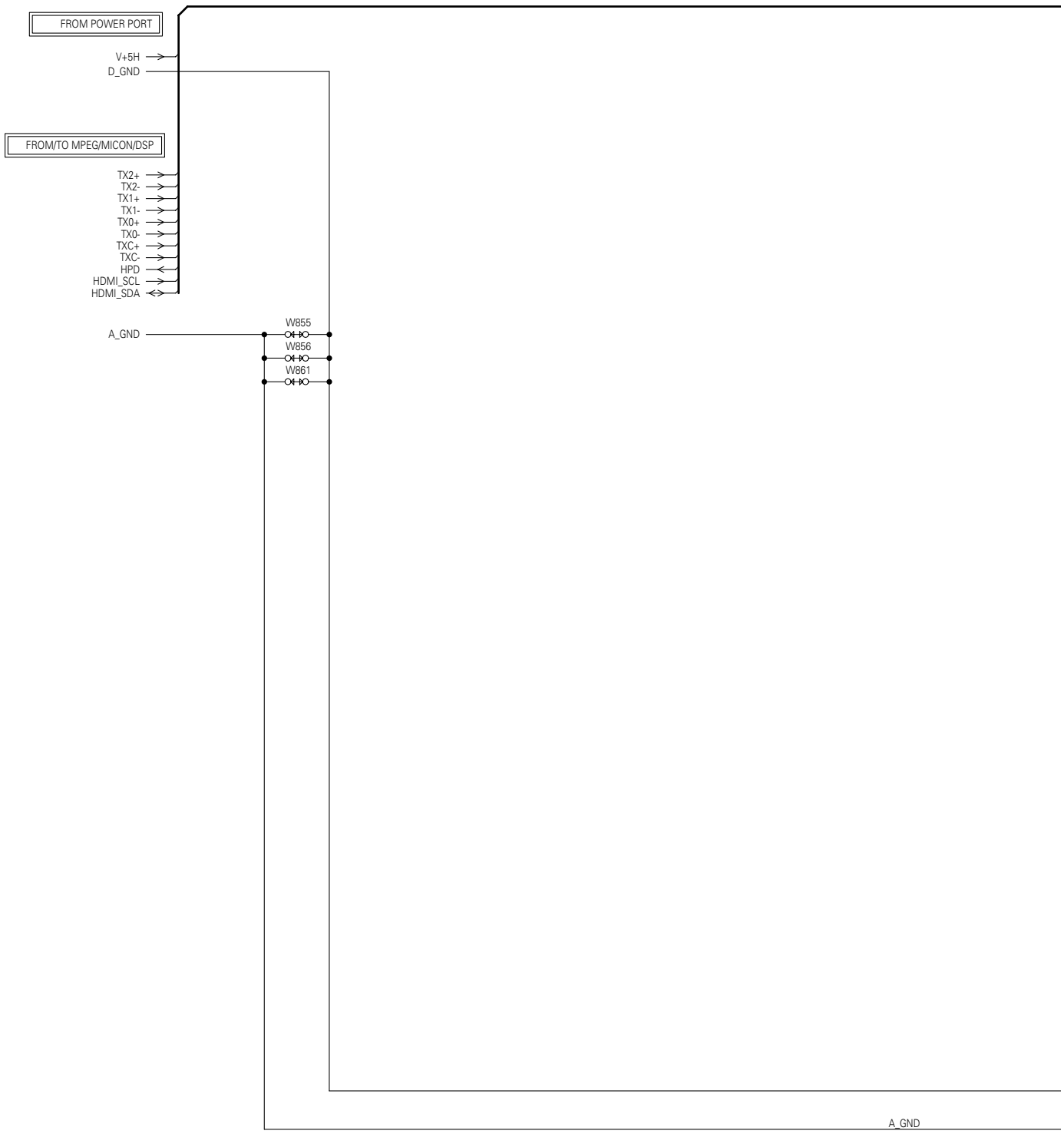

NOTE:THE DC VOLTAGE EACH PART WAS MEASURED WITH THE DIGITAL TESTER DURING PLAYBACK.

NC

SCHEMATIC DIAGRAM
(DVD MT PCB)

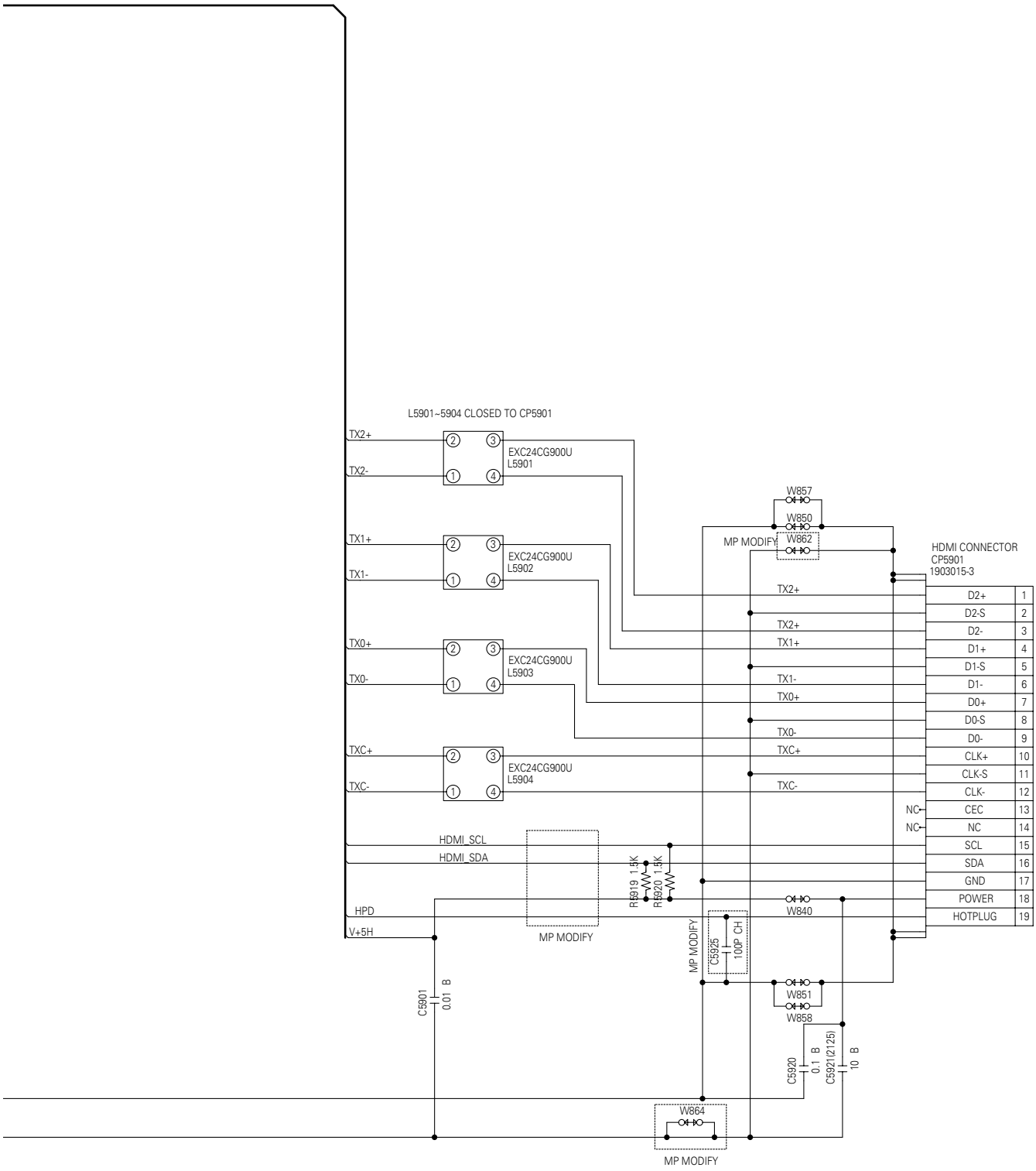

NOTE: THIS SCHEMATIC DIAGRAM IS THE LATEST AT THE TIME OF PRINTING AND SUBJECT TO CHANGE WITHOUT NOTICE 。

PCB130
DMF090

10.7 DVD MT PCB ASSY(7/7)

DVD MT PCB ASSY (7/7) (A2K404A130)

A

POWER PORT SCHEMATI(

(DVD MT PCB)

B

C

D

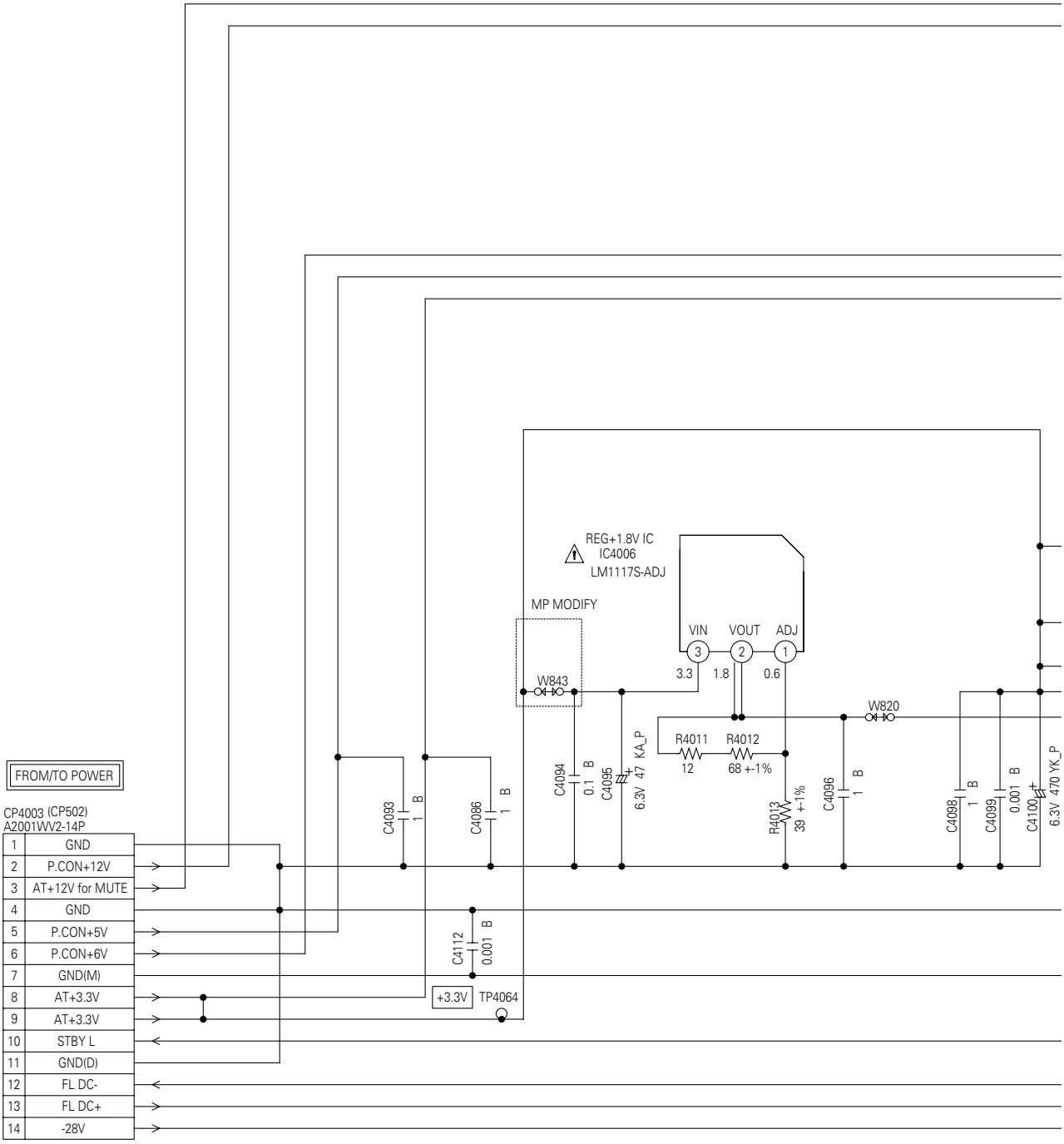

E

F

NOTE: THE DC VOLTAGE EACH PART WAS MEASURED WITH THE DIGITAL TESTER DURING PLAYBACK.

NOTE: THIS SCHEMATIC DIAGRAM IS THE LATEST AT THE TIME OF PRINTING AND SUBJECT TO CHANGE WITHOUT NOTICE 。

CAUTION SINCE T
CRITICA
DESCRI

HEMATIC DIAGRAM
IT PCB)

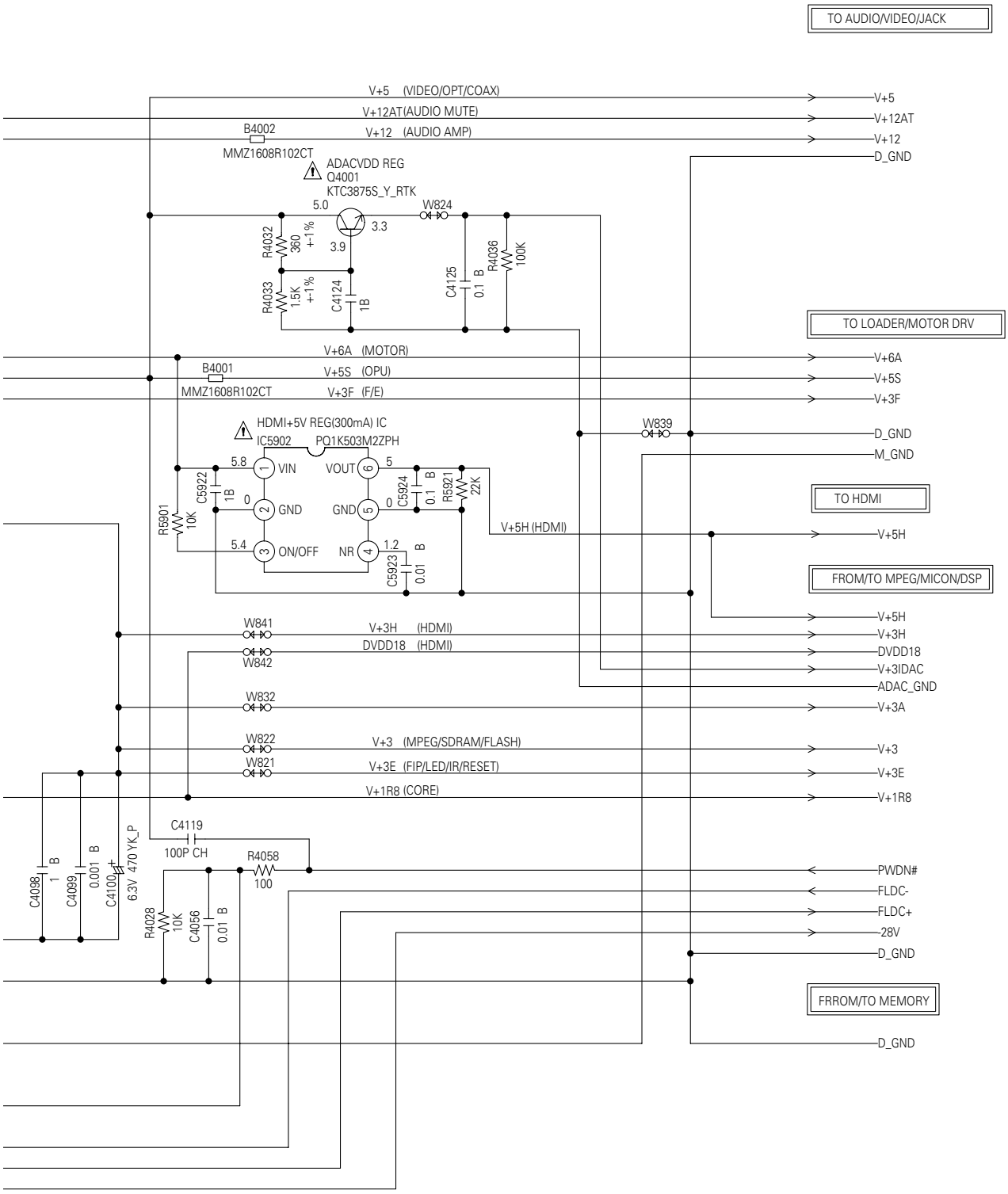

AUTION SINCE THESE PARTS MARKED BY ⚠ ARE CRITICAL FOR SAFETY,USE ONES DESCRIBED IN PARTS LIST ONLY 。

ATTENTION :LES PIECES REPAREES PAR UN ⚠ ETANT DANGEREUSES AN POINT DE VUE SECURITE N'UTILISER QUE CELLS DECRITES DANS LA NOMENCLATURE DES PIECES。

PCB130
DMF090

10.8 OPERATION 1 and OPERATION 2 and OPERATION 3 PCB ASSYS

OPERATION 1 PCB ASSY (A2K404A270)

Switches
SW652 : DOWN (⬇)
SW653 : ENTER
SW654 : RIGHT (➡)
SW655 : RETURN
SW656 : MENU
SW657 : UP (⬆)
SW658 : TOP MENU
SW659 : LEFT (⬅)
SW660 : STOP (■)
SW661 : HOME MENU
SW662 : + SKIP (▶▶I)
SW663 : PLAY (▶)
SW664 : – SKIP (I◀◀)
SW665 : PAUSE (❚❚)
SW666 : EJECT (⏏)

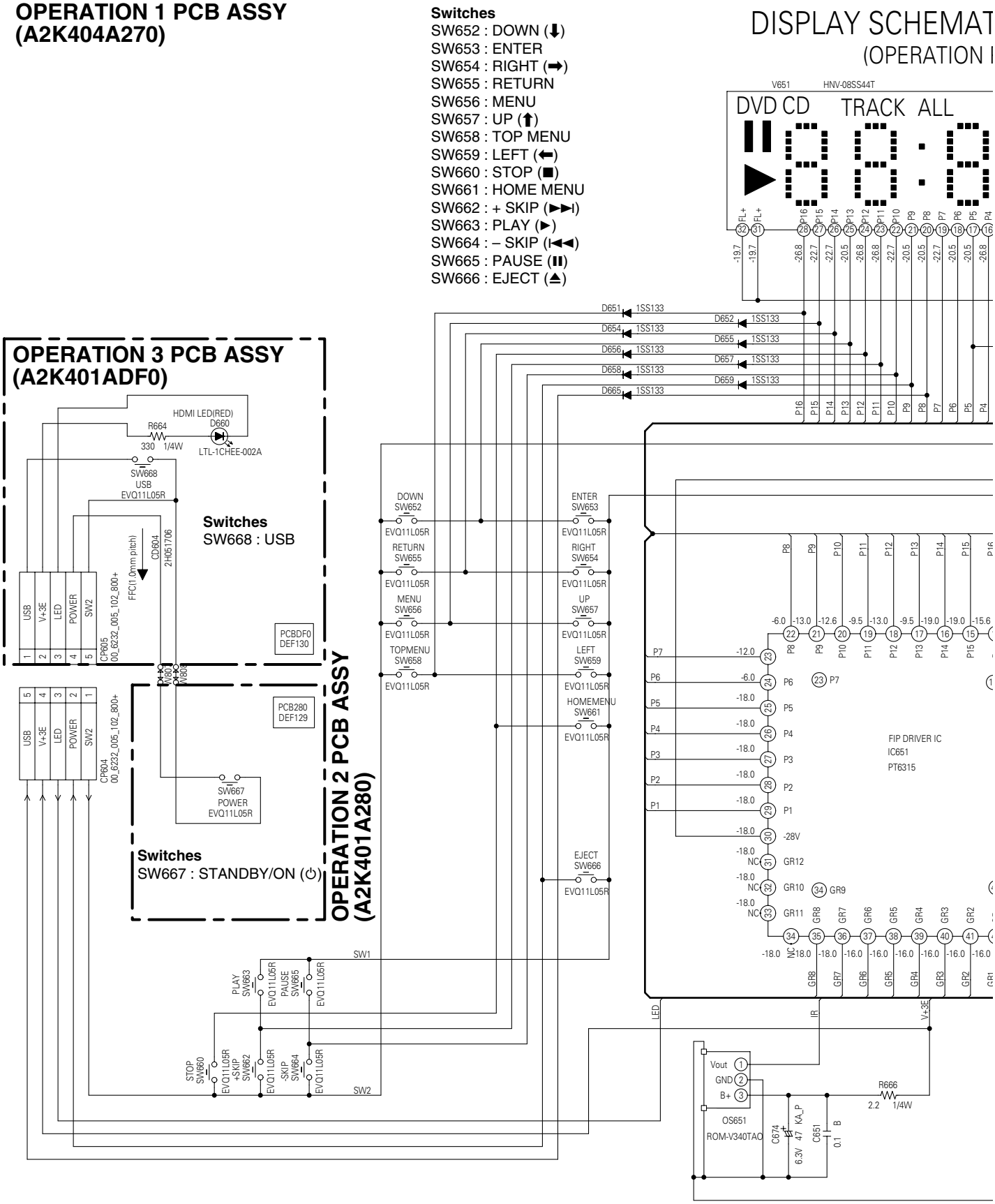

NOTE:THE DC VOLTAGE EACH PART WAS MEASURED WITH THE DIGITAL TESTER DURING PLAYBACK.

SCHEMATIC DIAGRAM
OPERATION PCB)

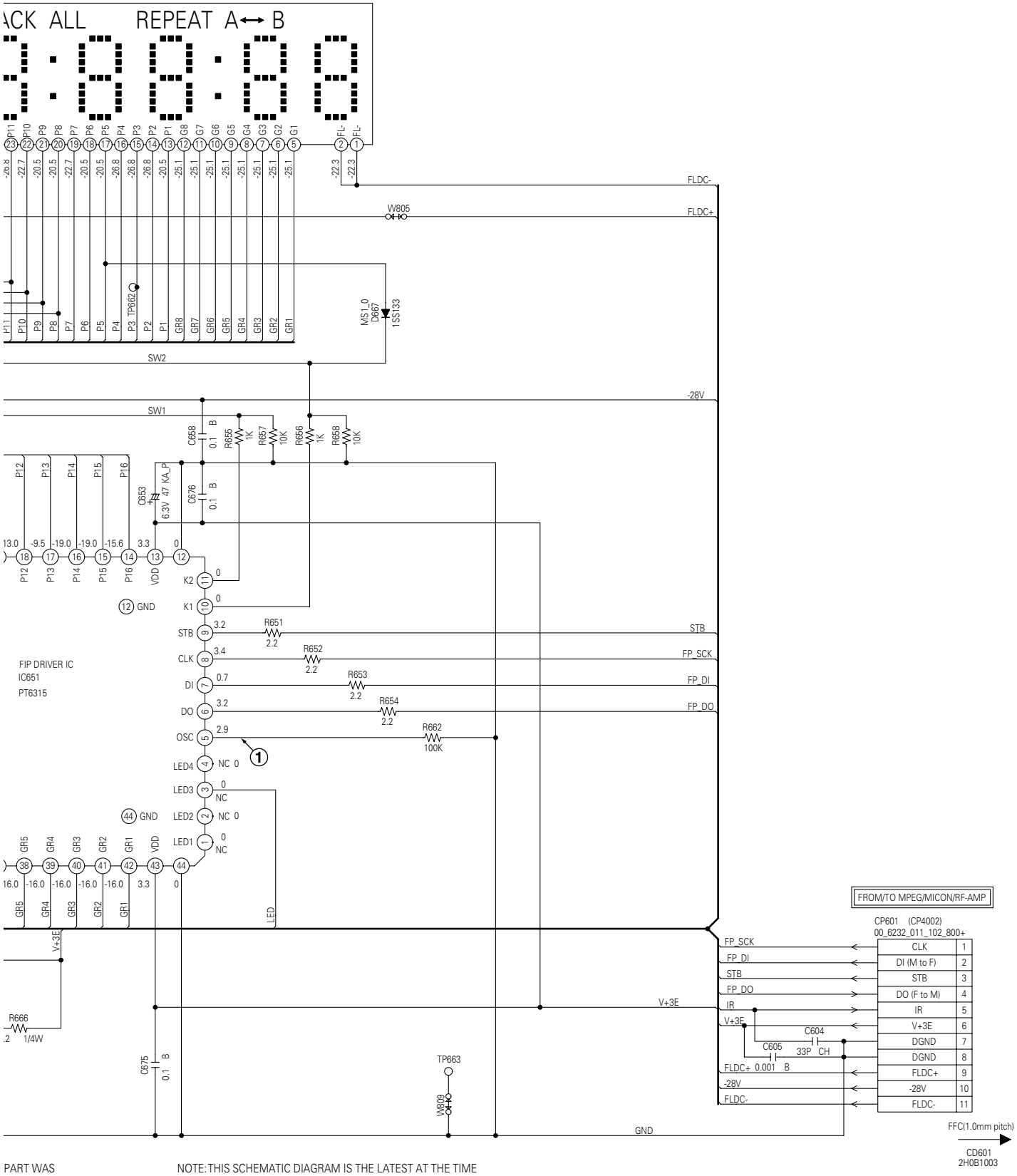

PART WAS
IGITAL TESTER

NOTE: THIS SCHEMATIC DIAGRAM IS THE LATEST AT THE TIME OF PRINTING AND SUBJECT TO CHANGE WITHOUT NOTICE 。

PCB270
DEF126

10.9 POWER PCB ASSY

POWER PCB ASSY (A2K404A240)

POWER SCHEMATIC D
(POWER PCB)

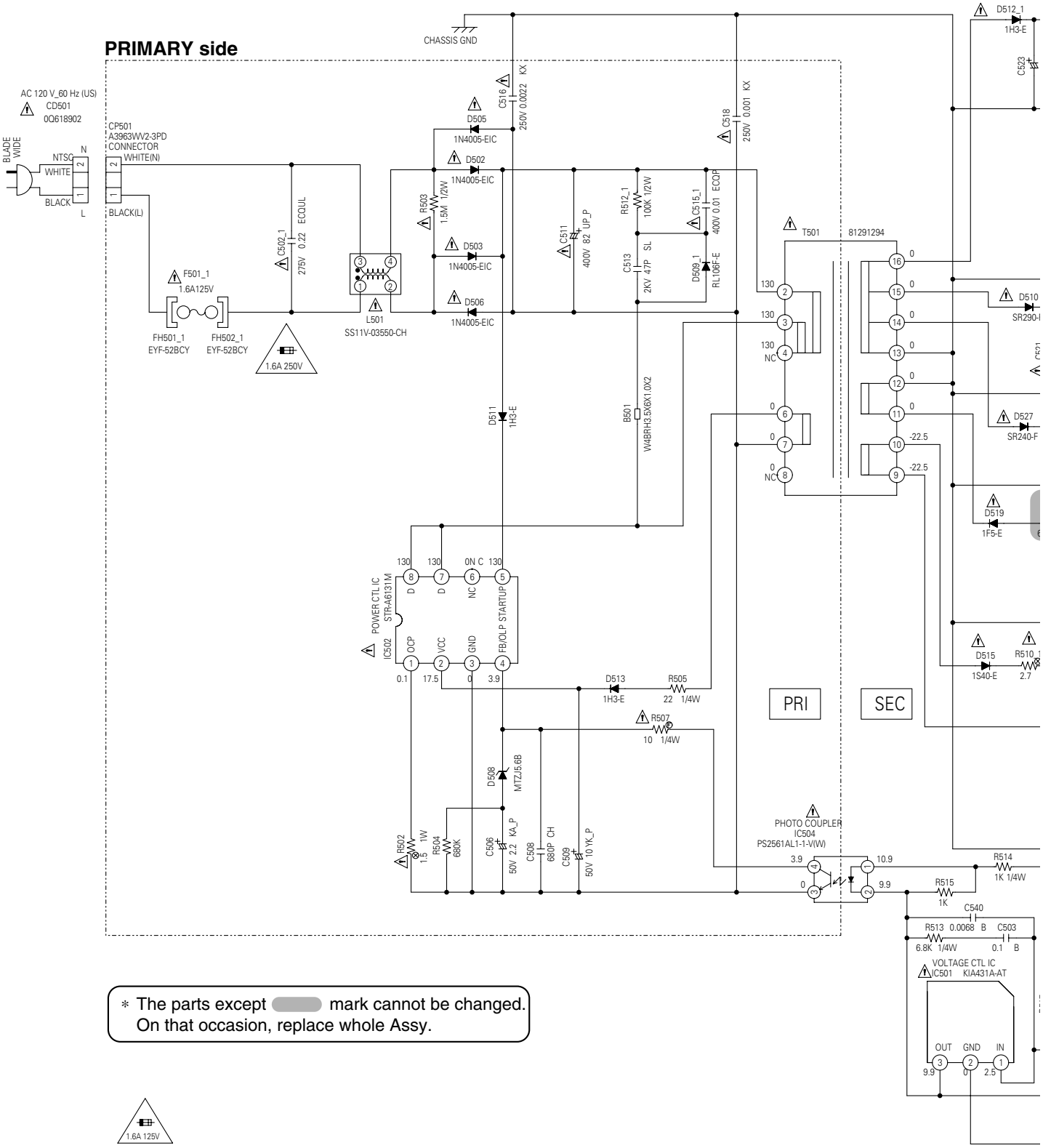

* The parts except mark cannot be changed.
On that occasion, replace whole Assy.

CAUTION :FOR CONTINUED PROTECTION AGAINST FIRE HAZARD, REPLACE ONLY WITH THE SAME TYPE FUSE 1.6A 125V{F501}

ATTENTION :POUR UNE PROTECTION CONTINUE LES RISQUES D'INCEIE N'UTILISER QUE DES FUSIBLE DE MEME TYPE 1.6A 125V{F501}

CAUTION SINCE THESE PARTS MARKED BY ⚠ ARE CRITICAL FOR SAFETY,USE ONES DESCRIBED IN PARTS LIST ONLY 。

ATTENTION :LES PIECES REPAREES PAR UN ⚠ ETANT DANGEREUSES AN POINT DE VUE SECURITE N'UTILISER QUE CELLS DECRITES DANS LA NOMENCLATURE DES PIECES。

EMATIC DIAGRAM

/ER PCB)

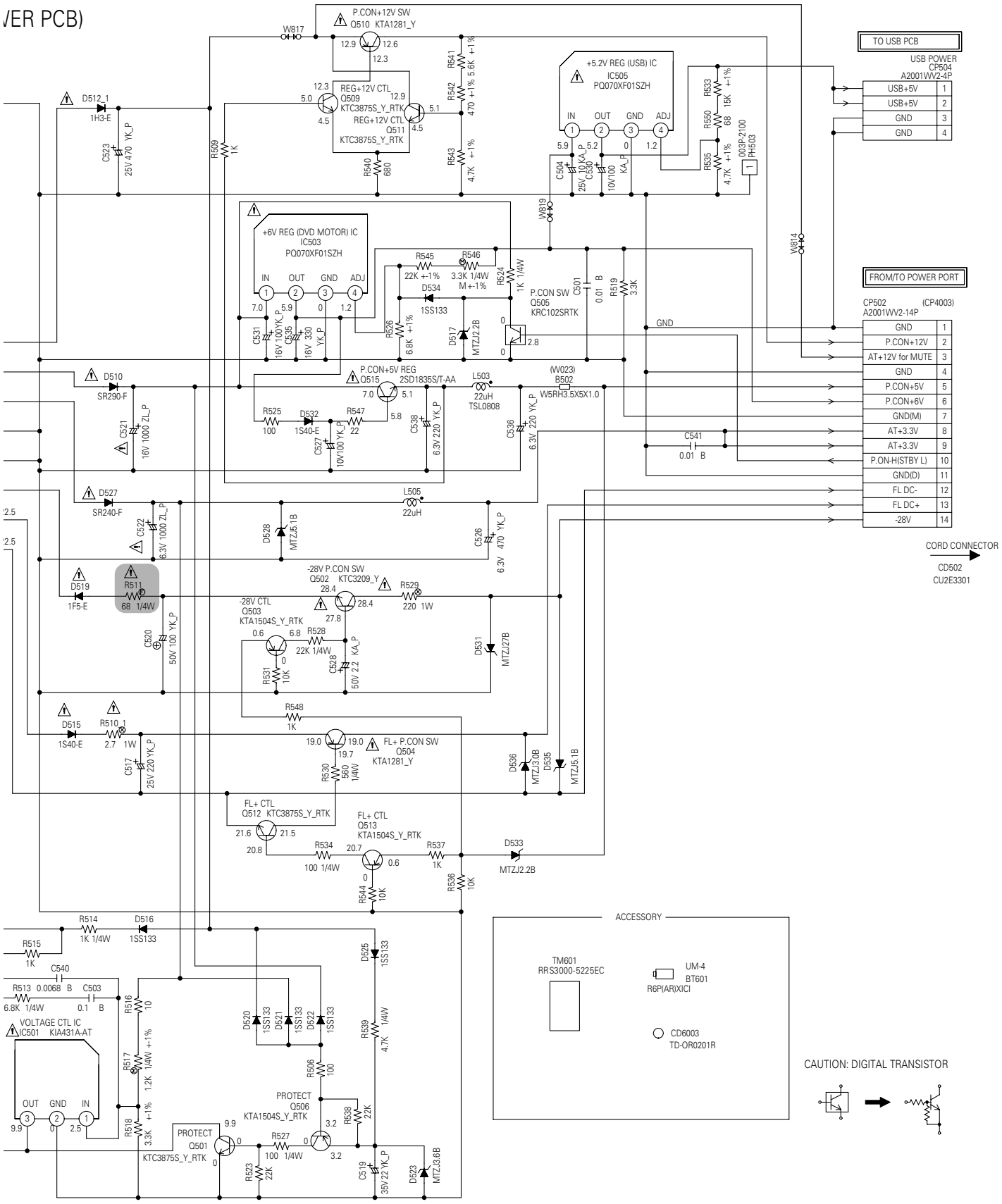

AREES PAR UN ⚠ ETANT
AN POINT DE VUE SECURITE
E CELLS DECRITES
ENCLATURE DES PIECES。

NOTE: THIS SCHEMATIC DIAGRAM IS THE LATEST AT THE TIME OF PRINTING AND SUBJECT TO CHANGE WITHOUT NOTICE 。

NOTE: THE DC VOLTAGE EACH PART WAS MEASURED WITH THE DIGITAL TESTER DURING PLAYBACK.

NOTE: THE RESISTOR MARKED F IS FUSE RESISTOR. THE ALUMI ELECTROLYTIC CAPACITOR MARKED NP IS NON POLAR ONE.

PCB240
DPF015

10.10 USB PCB ASSY

USB PCB ASSY (A2K401ADD0)

USB SCHEMATIC [

(USB PCB)

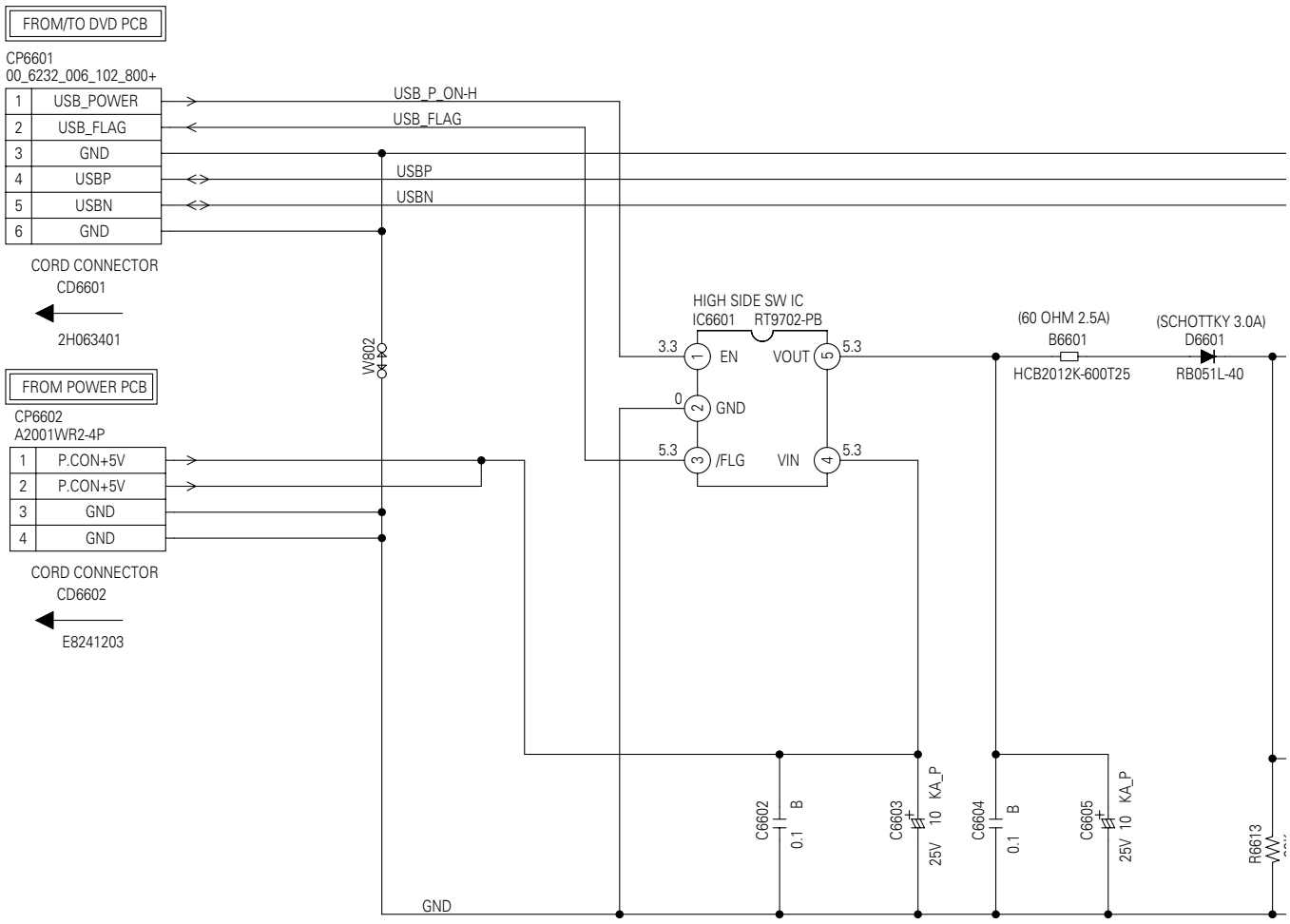

NOTE:THE DC VOLTAGE EACH PART WAS MEASURED WITH THE DIGITAL TESTER DURING PLAYBACK.

MATIC DIAGRAM

SB PCB)

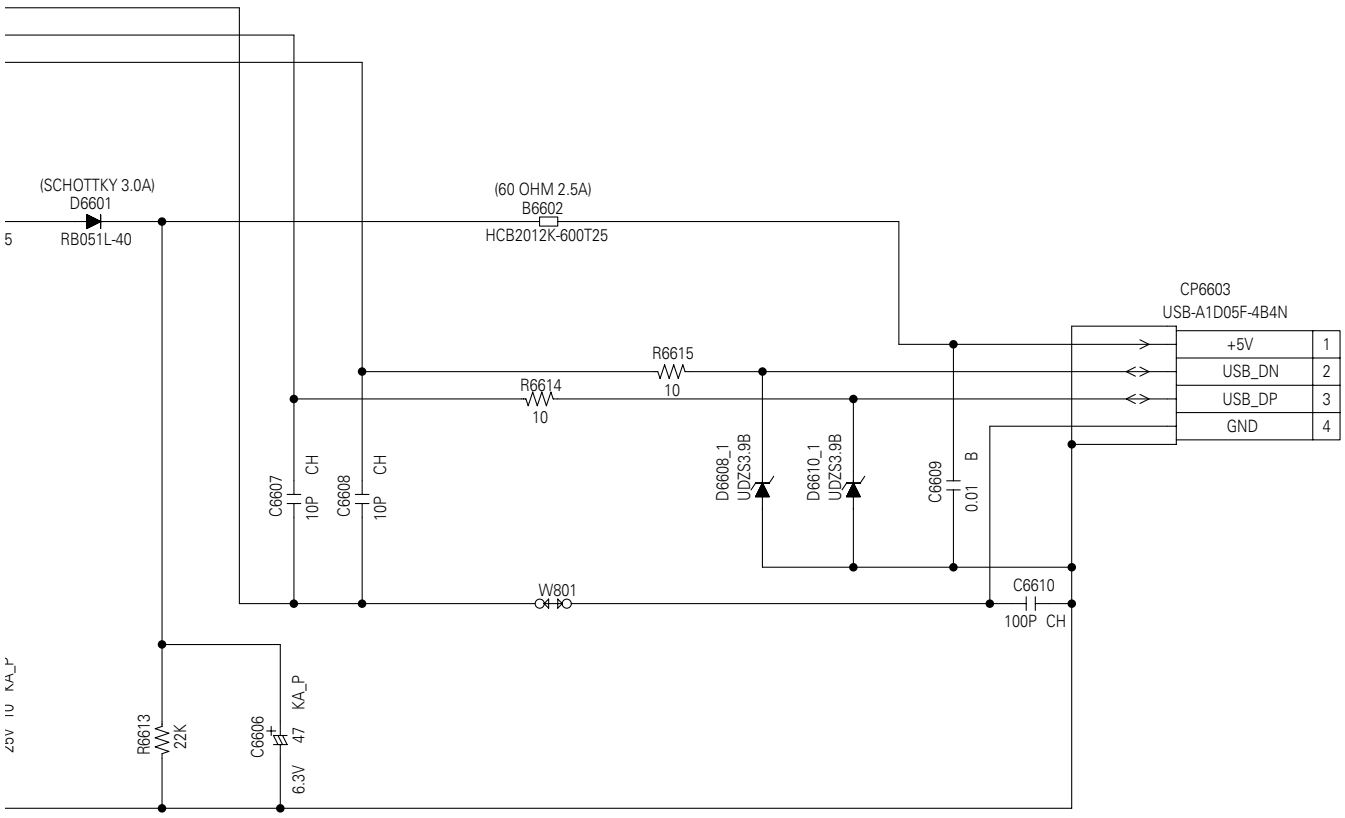

PART WAS
DIGITAL TESTER

NOTE:THE DC VOLTAGE AT EACH PART WAS MEASURED
WITH THE DIGITAL TESTER WHEN THE COLOR BROADCAST
WAS RECEIVED IN GOOD CONDITION AND PICTURE IS NORMAL.

PCBDD0
DEF133

10.11 WAVE FORMS

Note : The encircled numbers denote measuring point in the schematic diagram.

DVD MT PCB ASSY

MPEG/MICON/DSP

IC4002-pin136 (RCLK)
V:1.0V/div. H:2nsec/div.

①

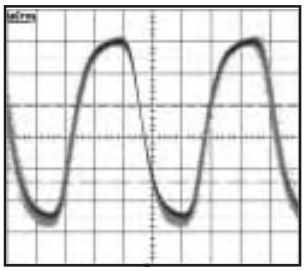

J8002-pin2 (Coaxial_Out)
V:500mV/div. H:200nsec/div.

⑥

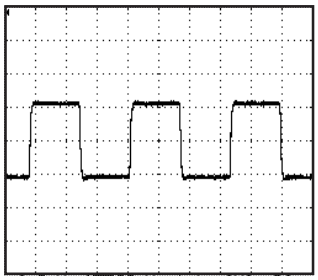

J7301-pin3 (S_Y)
V:500mV/div. H:20µsec/div.

⑪

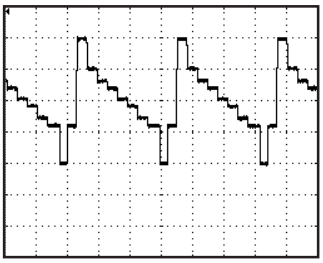

IC4002-pin215 (ASPDIF)
V:1.0V/div. H:2nsec/div.

②

J7302-pin6 (CVBS_Out)
V:200mV/div. H:10µsec/div.

⑦

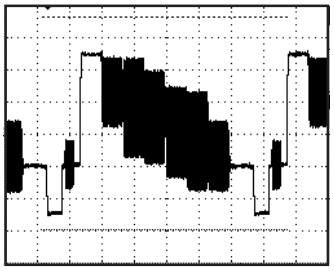

J7301-pin4 (S_C)
V:500mV/div. H:10µsec/div.

⑫

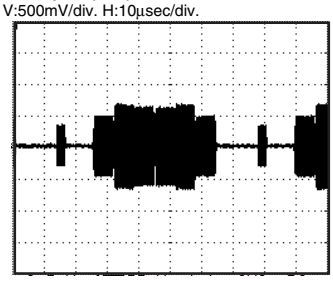

CP4002-pin1 (FP_SCK)
V:1.0V/div. H:20µsec/div.

③

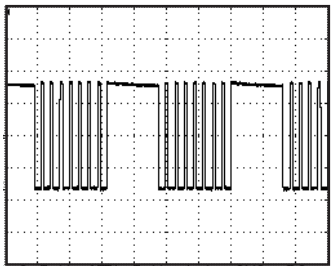

VIDEO JACK

J7302-pin5 (Y_Out)
V:500mV/div. H:10µsec/div.

⑧

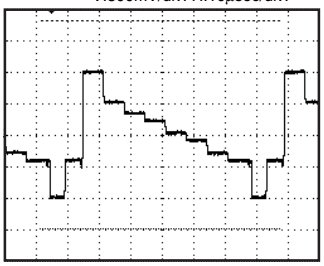

J8003-pin3 (Lch_Out)
V:1.0V/div. H:500µsec/div.

④

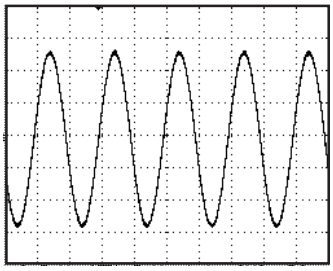

J7302-pin3 (U_Out)
V:500mV/div. H:20µsec/div.

⑨

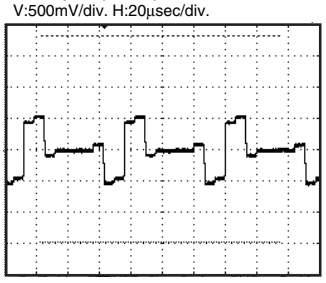

AUDIO JACK

J8003-pin2 (Rch_Out)
V:1.0V/div. H:500µsec/div.

⑤

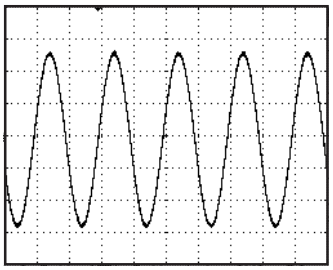

J7302-pin2 (V_Out)
V:500mV/div. H:20µsec/div.

⑩

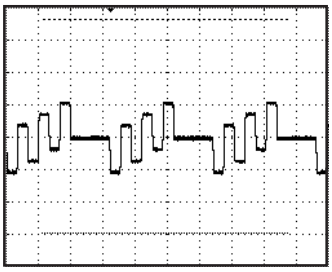

OPERATION 1 PCB ASSY

DISPLAY

IC651-pin5 (OSC)
V:500V/div. H:1nsec/div.

①

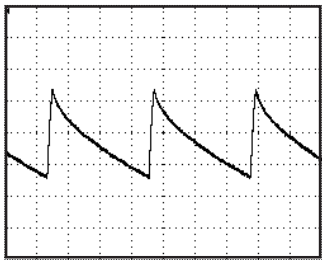

A

B

C

D

E

F

11. PCB CONNECTION DIAGRAM

NOTE FOR PCB DIAGRAMS :

1. Part numbers in PCB diagrams match those in the schematic diagrams.
2. A comparison between the main parts of PCB and schematic diagrams is shown below.

Symbol In PCB Diagrams	Symbol In Schematic Diagrams	Part Name
B C E	B C E B C E	Transistor
B C E	B C E B C E	Transistor with resistor
D G S	D G S D G S	Field effect transistor
		Resistor array
		3-terminal regulator

3. The parts mounted on this PCB include all necessary parts for several destinations.
   For further information for respective destinations, be sure to check with the schematic diagram.
4. View point of PCB diagrams.

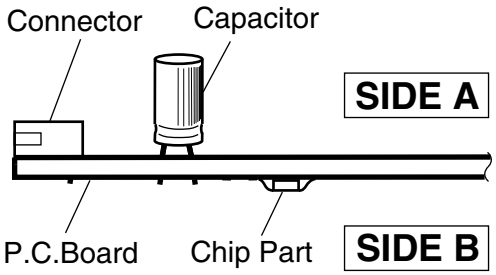

11.1 DVD MT PCB ASSY

SIDE A **SIDE A**

A

DVD MT PCB ASSY

B

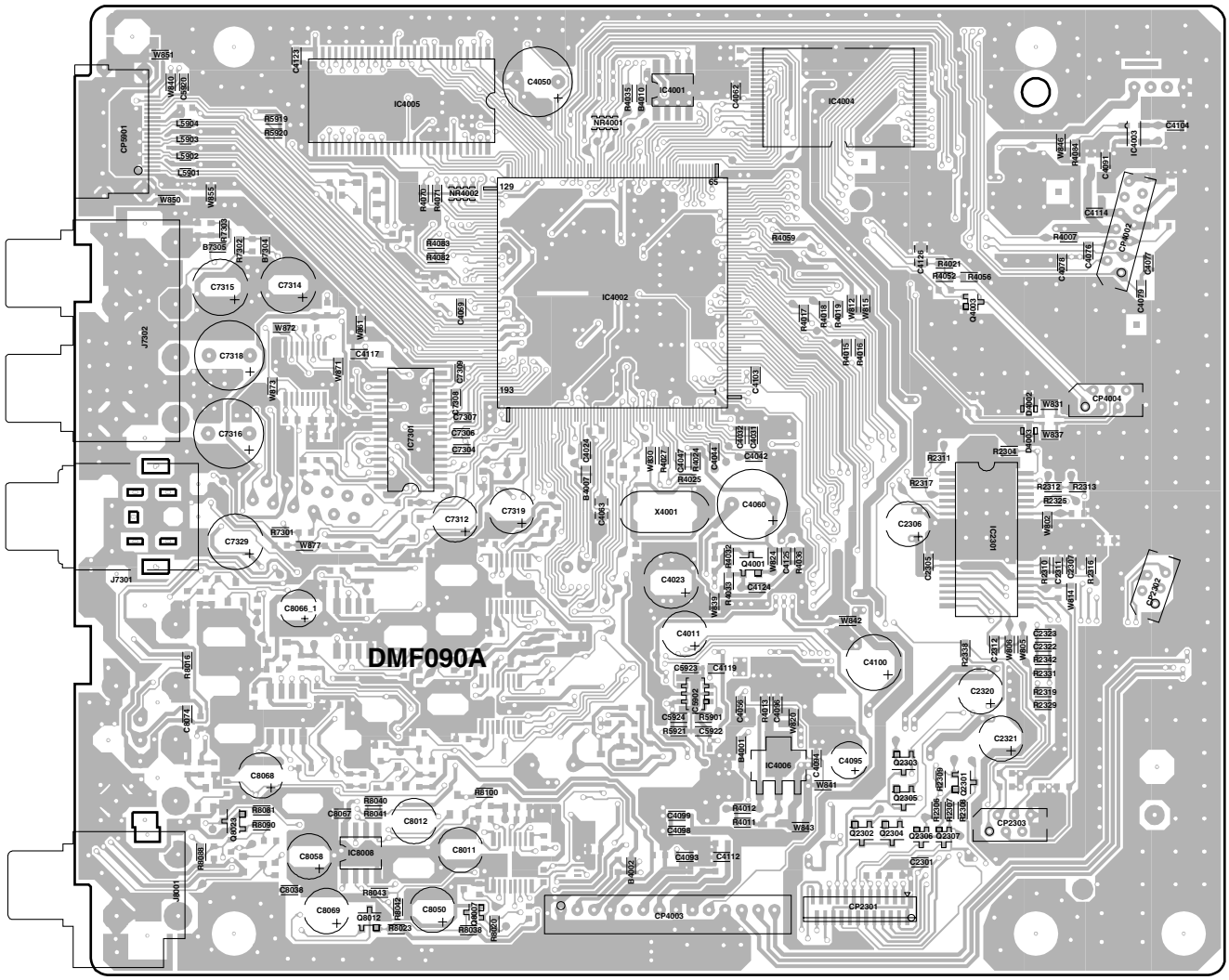

C

D

E

F

SIDE B

SIDE B

DVD MT PCB ASSY

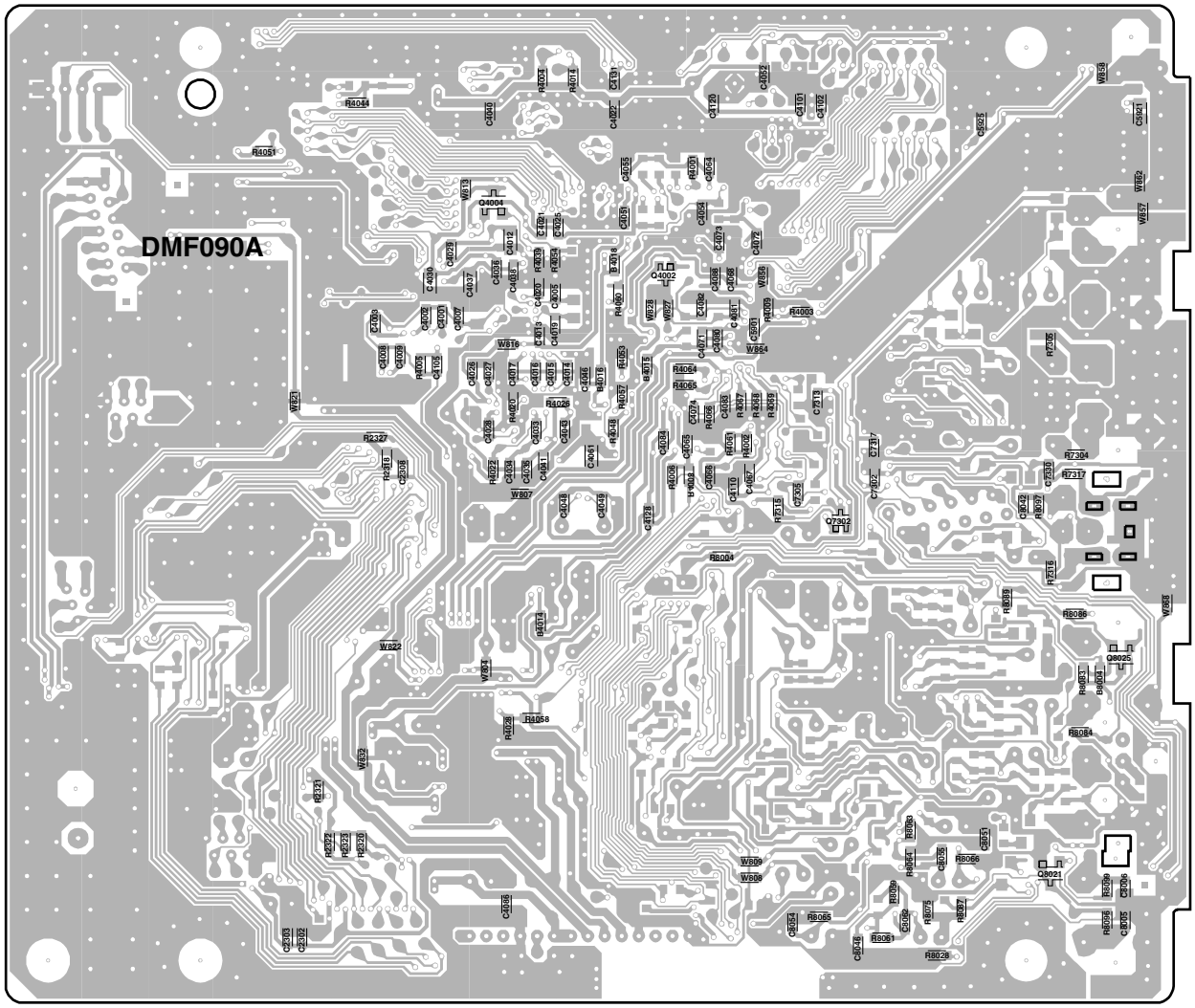

11.2 OPERATION 1 PCB and OPERATION 2 PCB ASSYS (WYXZT5 types)

SIDE A

SIDE A

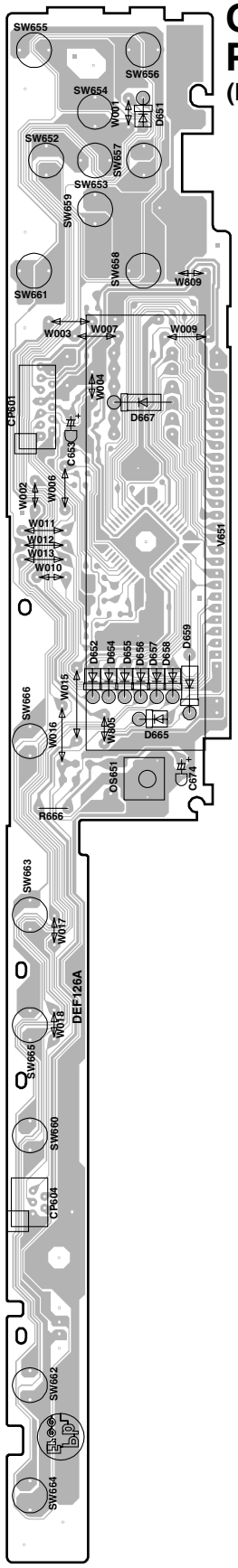

OPERATION 1 PCB ASSY
(INSERTED PARTS)

OPERATION 1 PCB ASSY
(CHIP MOUNTED PARTS)

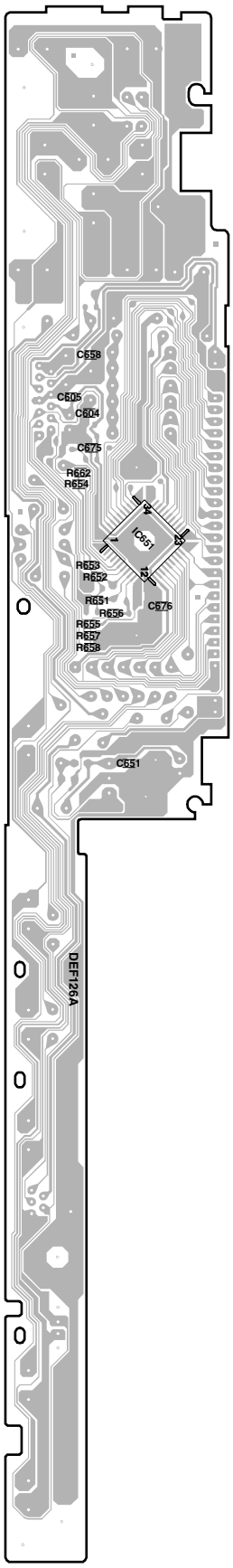

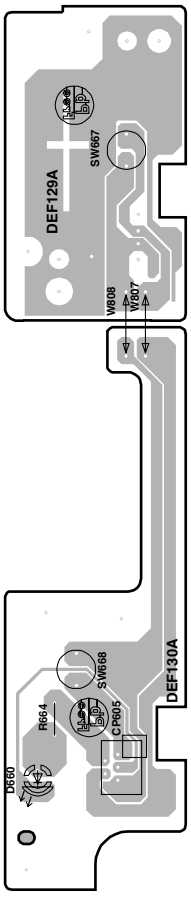

OPERATION 2 PCB ASSY
(INSERTED PARTS)

OPERATION 3 PCB ASSY
(INSERTED PARTS)

11.3 POWER PCB ASSY

SIDE A **SIDE A**

A

POWER PCB ASSY
(INSERTED PARTS)

B

C

D

E

F

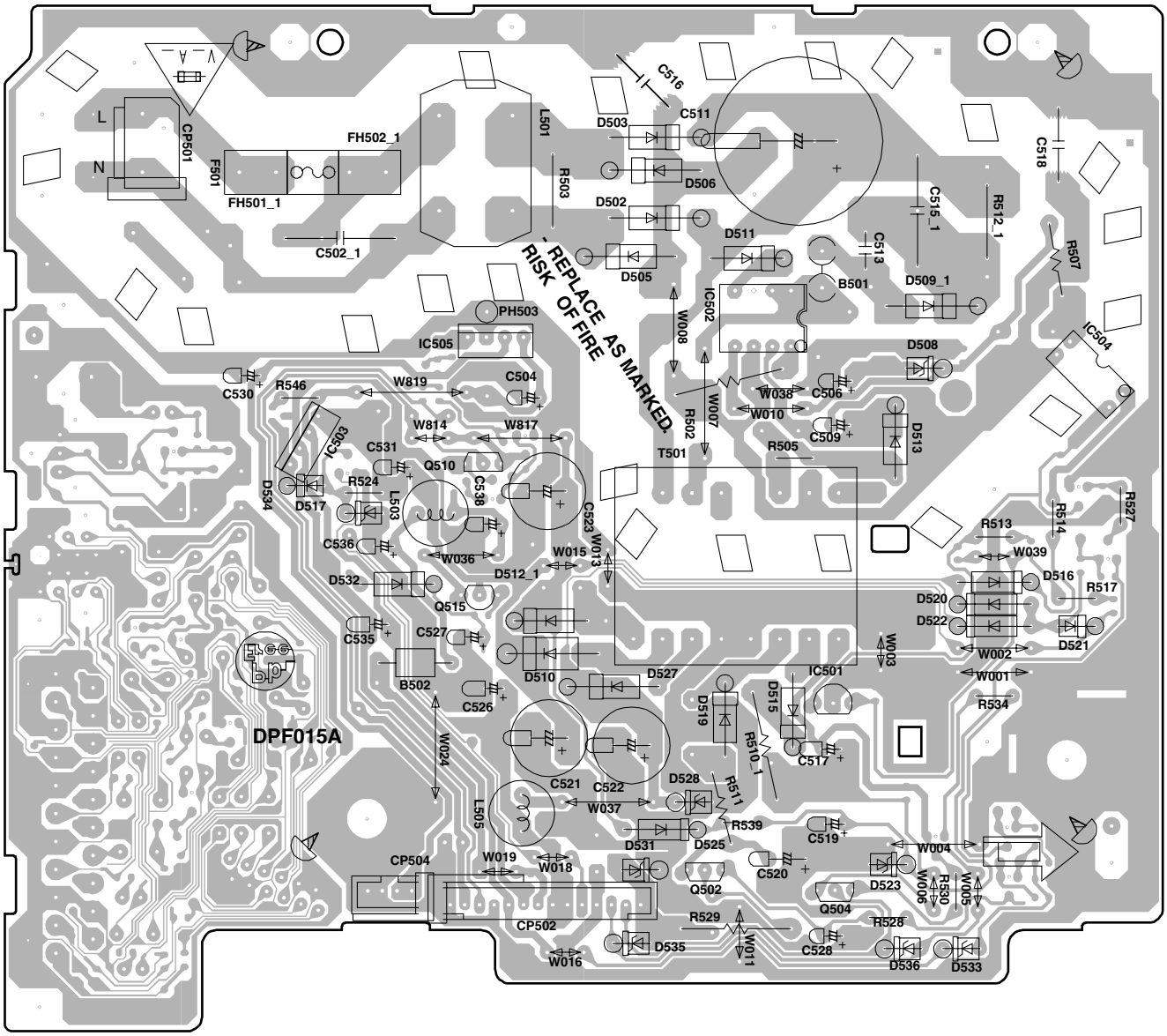

- REPLACE AS MARKED
RISK OF FIRE

SIDE A

SIDE A

POWER PCB ASSY
(CHIP MOUNTED PARTS)

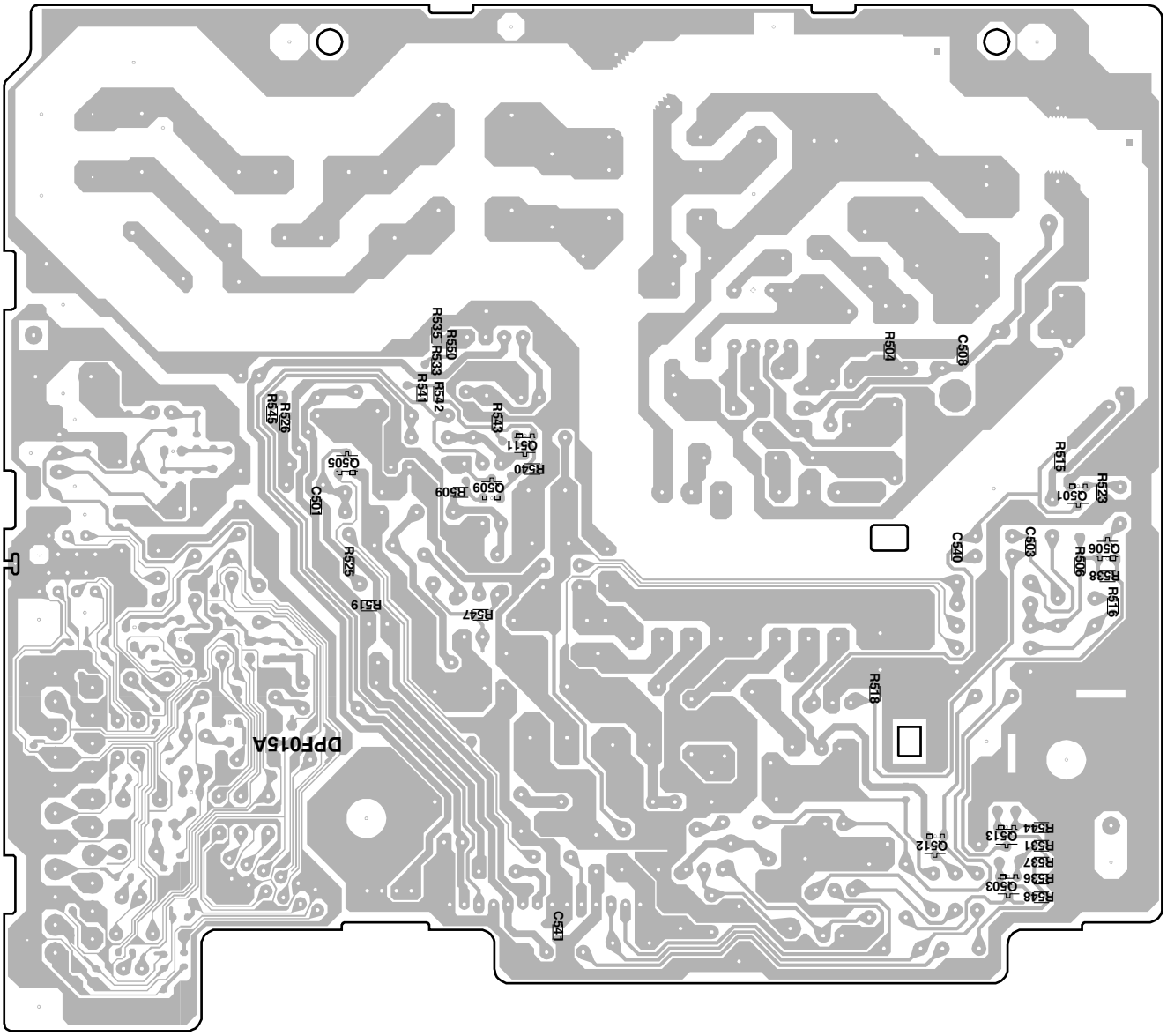

A
B
C
D
E
F

11.4 USB PCB ASSY and LOADING MOTER and SW

SIDE A

SIDE A

USB PCB ASSY
(INSERTED PARTS)

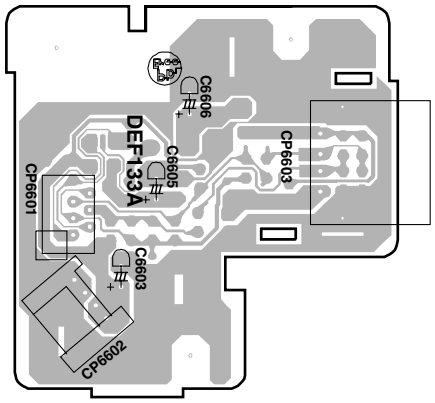

USB PCB ASSY
(CHIP MOUNTED PARTS)

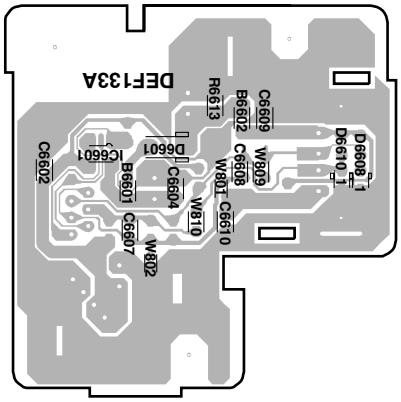

LOADING MOTOR
(INSERTED PARTS)

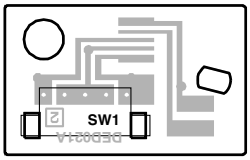

LOADING MOTOR
(CHIP MOUNTED PARTS)

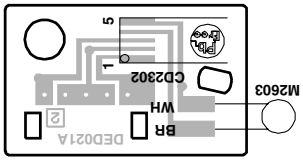

SW

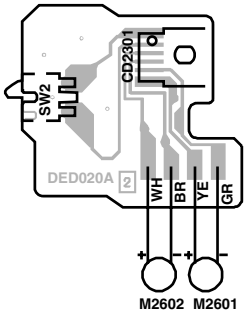

12. PCB PARTS LIST

NOTES:
- *Parts marked by "NSP" are generally unavailable because they are not in our Master Spare Parts List.*
- *The ⚠ mark found on some component parts indicates the importance of the safety factor of the part. Therefore, when replacing, be sure to use parts of identical designation.*
- *When ordering resistors, first convert resistance values into code form as shown in the following examples.*

Ex.1 When there are 2 effective digits (any digit apart from 0), such as 560 ohm and 47k ohm (tolerance is shown by J=5%, and K=10%).

560 Ω	→	*56 x 10^1*	→ *561*	*RD1/4PU 5 6 1 J*
47k Ω	→	*47 x 10^3*	→ *473*	*RD1/4PU 4 7 3 J*
0.5 Ω	→	*R50*		*RN2H R 5 0 K*
1 Ω	→	*1R0*		*RS1P 1 R 0 K*

Ex.2 When there are 3 effective digits (such as in high precision metal film resistors).

5.62k Ω	→	*562 x 10^1*	→ *5621*	*RN1/4PC 5 6 2 1 F*

Mark	No.	Description	Part No.
LIST OF ASSEMBLIES			
	1..	DVD MT PCB ASSY	A2K404A130
	1..	OPERATION 1 PCB ASSY	A2K404A270
	1..	OPERATION 2 PCB ASSY	A2K401A280
	1..	OPERATION 3 PCB ASSY	A2K401ADF0
⚠	1..	POWER PCB ASSSY	A2K404A240
	1..	USB PCB ASSY	A2K401ADD0
	1..	DVD MECHA ASSY	A2K001A650

Mark	No.	Description	Part No.
DVD MT PCB ASSY			
SEMICONDUCTORS			
	IC2301	IC AM5766	I1UFV5766S
	IC4001	IC S-24CS08AFJ-TB-1GE	I5HJ0S08A0
	IC4002	IC MT1389FE/S-L	IC8K0389S0
	IC4003	IC R3112N291A-TR-FA	IE1F0291A0
	IC4004	IC ES29LV160EB-70TG	S2K401AF01
	IC4005	IC HY57V641620ETP-6	ICLJ0TP6C0
	IC4006	IC LM1117S-ADJ	I1TF911170
	IC7301	IC LA73054-TLM	I03FG30540
	IC5902	IC PQ1K503M2ZPH	I0GF9K5030
	IC8008	IC RC4580IDR	I04J045800
OTHERS			
	J7301	JACK PLATE	063Y000081
	J7302	RCA JACK	060R451010
	J8001	RCA JACK	060R451009
	CP5901	CONNECTOR PCB SIDE	0694YJ3018
	X4001	CRYSTAL (27MHz)	100GT02720
OPERATION 1 PCB ASSY			
SEMICONDUCTORS			
	IC651	IC PT6315	IF4K063150
SWITCHES			
	SW652 - SW666	SWITCH TACT	0504R01T38
OTHERS			
	V651	TUBE FLUORESCENT	096F82R601
	OS651	REMOTE RECEIVER	077A040002

Mark	No.	Description	Part No.
OPERATION 2 PCB ASSY			
SWITCHES			
	SW667	SWITCH TACT	0504R01T38
OPERATION 3 PCB ASSY			
SWITCHES			
	SW668	SWITCH TACT	0504R01T38
POWER PCB ASSY			
RESISTORS			
⚠	R511	R,FUSE 68 OHM 1/4W	R65584680J
USB PCB ASSY			
SEMICONDUCTORS			
	IC6601	RT9702-PB	I4UF097020
OTHERS			
	CP6603	CONNECTOR PCB SIDE	06G5AA1001